SE HABLA ESPANOL

HDD TOOL CATALOG

VOLUME 9

radius®
TOOLS FOR HDD PROFESSIONALS

CALL, TEXT, CLICK.



We know you are busy. So we give you more ways to order, whether you are in the middle of town or the middle of nowhere. Call or text us at **855.471.2771.**

Or order online at **radiushdd.com.** You can even find Radius tools at participating dealers worldwide.

LLAMADA, TEXTO, CLIC.



Sabemos que estás ocupado. Así que te damos más formas de ordenar, ya sea que estes en medio de la cuidad o en media de ninguna parte. Llámanos o envíanos un mensaje de texto al **855.471.2771.**

O haga su pedido en línea en **radiushdd.com.** Incluso puede encontrar herramientas Radius en los distribuidores participantes en todo el mundo.

FIND IT FAST.

DRIVE CHUCKS & SUB SAVERS 6

STARTER RODS, EZ CONNECTS, & QUICK CONNECTS 8

ADAPTERS & SUBS 10

HOUSINGS 17

ROCK TOOLS 22

BITS & BLADES 29

REAMERS 35

SWIVELS 39

PARTS & ACCESSORIES 41

REPAIRS 51

RADIUS HDD IS COMMITTED TO HDD TOOLS.

It's all we do. While a number of our customers are business heads, owners and managers, we consistently work directly with the "men in the mud". That is where our business started and will always be focused. By listening, watching and working with HDD operators and crews, we hear first hand what works and what doesn't. That input - your input - directly drives our business.

More than a decade into business, Radius offers a complete line of the highest quality tools to HDD professionals worldwide through the most comprehensive catalog and website in the industry. We will continue to work in the mud with contractors to listen and build the toughest and most innovative tools to help you tackle the challenges you face everyday.

We are proud of every driller that puts their confidence in our tool and will continue to work hard everyday to build that trust.

—Team Radius



BUILD & ORDER YOUR CUSTOM SUB ONLINE.

Build your sub today with our *easy to use online sub builder.* Any connection you need, Radius will get it to you the next day with our dedicated machines for same-day production.

A better experience, website to jobsite.



Radius offers today's HDD Pro more than 2,000 tools. But one of the most important tools you can take advantage of is RadiusHDD.com.

DRIVE CHUCKS
& SUB SAVERS

DITCH WITCH® COMPATIBLE 1 PC. DRIVE CHUCKS/SUB SAVERS

Part #	Fits Model	Thread Type	Length
953-0029	JT5	1.10 - 5 Pipe Box	6.5"
953-0030	JT520	1.21 - 6 Pipe Box	4.75"
953-0031	JT920L / 921	1.41 - 6 Pipe Box	6.375"
953-0032	JT922	1.30 - 5 Coarse Thread Pipe Box	9.5"
953-0218	JT922	1.41 - 6 Pipe Box	9.5"
953-0033	JT1220 / JT1220M1	1.47 - 4 Pipe Box	9.875"
953-0034	JT1720 / JT1720M1	1.69 - 6 Pipe Box	6.375"
953-0035	JT2020M1	1.94 - 4 Pipe Box	10.875"
953-0036	JT2720	1.94 - 4 Pipe Box	9.875"
953-0037	JT2720M1	2.11 - 4 Pipe Box	19.25"
953-0038	JT3020M1	2.11 - 6 Pipe Box (Square Flange)	27.25"
953-0039	JT4020	2.40 - 4 Pipe Box	9.5"
953-0040	JT4020M1	2.59 - 4 Pipe Box	20.5"
953-0041	JT7020 / JT8020 / JT100M1	3.27 - 4 Pipe Box	24.25"
953-0335	JT2720M1	2.11 - 4 Pipe Box (Large Flange)	19.375"
953-0367	JT100	3.27 - 4 Pipe Box	25.375"
953-0373	JT4020M1	2.59 - 4 Pipe Box (Large Flange)	25.25"
953-0256	JT922	1.66"	25.25"


953-0218


953-0331

DITCH WITCH® COMPATIBLE CONVERSION DRIVE CHUCKS

Part #	Fits Model	Thread Type	Length
953-0407	JT922 Box Down	1.66" Firestick 1 Pipe (200) (1 pc)	9.9"
953-0456	JT922 Box Down	1.66" Firestick 1 Pipe (200) (2 pc)	9.9"
953-0256	JT922 Box Down	1.66" Firestick 1 Pipe (200) (1 pc)	10.9"
953-0457	JT922 Box Down	1.66" Firestick 1 Pipe (200) (2 pc)	10.9"
953-0413	JT1220 / JT2020 Box Down	2.06" Firestick 1 Pipe (400) (1 pc)	10.25"
953-0416	JT1220 / JT2020 Pin Down	2.06" Firestick 1 Pipe (400) (1 pc)	11.5"
953-0214	JT2020M1 Box Down	2.375" Firestick 1 Pipe (600) (1 pc)	11.25"
953-0403	JT2020M1 Pin Down	2.375" Firestick 1 Pipe (600) (2 pc)	11.25"


953-0407

ASTEC® / TORO® / GRUNDODRILL® / UNIVERSAL

Part #	Fits Model	Thread Type
953-0331	Astec® 1416	1.9" FS1 Pin
953-0370	Astec® 3238	2-3/8' FS1 Pin

MISC. SUB SAVERS

Part #	Fits Model	Thread Type
953-0378	Sub Saver	2-7/8" IF Box Pin
953-0388	Barbco BD250-TK	3.5" IF Box x Pin


953-0378

THREAD LOCK EPOXY

Part #	Fits Model	Thread Type
954-0447	Jet-Lok 250 Thread Locker	Epoxy Resin / Activator (2 pc)

Precision machined for precise performance.

Our drive chucks are built to the exact specifications of the original equipment manufacturer using heat treated alloy.

DITCH WITCH® COMPATIBLE CONVERSION SUB SAVERS

Part #	Fits Model	Thread Type	Length
953-0455	JT922	1.66" Firestick 200 Pin x Pin (Pin Down) Conversion Sub Saver	7"
953-0017	JT2020M1	2.375" Firestick 600 Box x Pin (Pin Down) Conversion Sub Saver	5.5"
953-0415	JT1220 / 2020	2.06" Firestick 400 Box x Pin (Pin Down) Conversion Sub Saver	6.25"
953-0421	JT2720M1 / JT3020M1	2.375" Firestick 600 Pin x Pin (Pin Down) Conversion Sub Saver	11.25"



953-0455

VERMEER® COMPATIBLE 2 PC. DRIVE CHUCK ASSEMBLY

Part #	Fits Model	Thread Type	Overall Length
953-0001	D7x11	1.66" Firestick (200)	12.25"
953-0005	D10x15	1.66" Firestick (200)	13.25"
953-0008	D16x20 / D18x22	1.90" Firestick (250)	13.5"
953-0042	D24x26 / D20x22	2.06" Firestick (400)	13.5"
953-0015	D24x40 (Below SN# 383)	2.375" Firestick (600)	14.5"
953-0212	D24x40 (Above SN# 384)	2.375" Firestick (600)	16"
953-0211	D24x40 Series II	2.375" Firestick (600)	18.5"
953-0020	D33x44 / D36x50	2.375" Firestick (650)	16.5"
953-0048	D36x50 Series II	2.625" Firestick (700)	17.5"
953-0475	D40x55	2.625" Firestick (700)	18.5"
953-0270	D60x90	2.875" Firestick (900)	19.7"
953-0026	D50x100 / D55 x 100 / D75x100 / D80x100	3.5" Firestick (800)	20"
953-0195	D100x120 / D100x120 Series II / D100x140	3.5" Firestick (1000)	19.5"
953-0206	D100x120 / D100x120 Series II / D100x14	3.5" FS1 Pin (1000) Wireline	19.5"



953-0048

VERMEER® COMPATIBLE DRIVE CHUCKS / SUB SAVERS

Part #	Fits Model	Thread Type	Shoulder to Shoulder
953-0003	D7x11 / D10x14 / D10x15	1.66" Firestick (200)	4"
953-0004	D7x11 Series II / D9x13 Series II	1.66" Firestick (200)	7"
953-0010	D16x20 / D18x22	1.90" Firestick (250)	4"
953-0011	D16x20 / D20x22	1.90" Firestick (250)	10.14"
953-0044	D18x22 / D20x22 / D24x26	2.06" Firestick (400)	6.5"
953-0046	D20x22 Series II	2.06" Firestick (400)	10.14"
953-0047	D20x22FX Series II (No Flange Required)	2.06" Firestick (400)	10.14"
953-0473	D23x30	2-3/8" Firestick (600)	10.125"
953-0017	D24x40 (Below Serial # #383)	2.375" Firestick (600)	5.5"
953-0200	D24x40 (Serial Number #384 and Above)	2.375" Firestick (600)	7"
953-0019	D24x40 Series II	2.375" Firestick (600)	9.5"
953-0022	D33x44 / D36x50	2.375" Firestick (650)	7.92"
953-0018	D33x44 / D36x50	2.375" Firestick II (602)	8.375"
953-0201	D36x50	2.625" Firestick (700)	8.5"
953-0272	D36x50DR Outer Rod	2.625" Firestick (750)	9.5"
953-0474	D40x55	2.625" Firestick (700)	9.5"
953-0025	D50x100	2.875" Firestick (900)	8.3"
953-0271	D60x90	2.875" Firestick (900)	8.5"
953-0028	D50x100 / D55x100 / D75x100 / D80x100	3.5" Firestick (800)	7"
953-0197	D100x120 Series II / D100x140	3.5" Firestick (1000)	7"



953-0004

STARTER RODS
& QUICK CONNECTS

COLLARS

Radius collars feature our proprietary hard-facing matrix for increased durability and wear resistance. The collar fits over the flats on the starter rod, preventing over-torquing of the threads.

VERMEER® COMPATIBLE COLLARS

Part #	Description	Fits Model
953-0057	2" Hex Collar with Hardfacing 1.625" Low Profile	D7x11 / D9x13 / D10x14 / D10x15
953-0058	2.5" Hex Collar with Hardfacing 2.125" Low Profile	D36x50 to D40x40
953-0364	2.5" Hex Collar with Carbide Teeth and Hardfacing	D36x50 to D40x40
953-0396	2" Hex Collar with Carbide Teeth and Hardfacing	D7x11 / D9x13 / D10x14 / D10x15
953-0275	Hex Collar, Quickfire 300 Compatible with Hardfacing	D7x11 / D9x13 / D10x14 / D10x15
953-0276	Hex Collar, Quickfire 400 Compatible with Hardfacing	D36x50 to D40x40
953-0277	Hex Collar, Quickfire 460 Compatible with Hardfacing	D36x50 / D36x50 Series II / D40x55
953-0397	Hex Collar, Quickfire 300 Compatible w/ Carbide Teeth & Hardfacing	D7x11 / D9x13 / D10x14 / D10x15
953-0398	Hex Collar, Quickfire 400 Compatible w/ Carbide Teeth & Hardfacing	D36x50 to D40x40
953-0399	Hex Collar, Quickfire 460 Compatible w/ Carbide Teeth & Hardfacing	D36x50 / D36x50 Series II / D40x55



953-0057

DITCH WITCH® COMPATIBLE OCTAGON COLLARS

Part #	Description	Fits Model
953-0070	1.5" Octagon Collar EZ2 with Hardfacing	JT520 / JT5
953-0071	2" Octagon Collar EZ2 with Hardfacing	JT920 / JT920L / JT922 / JT10
953-0072	2.25" Octagon Collar EZ3 with Hardfacing	JT1220
953-0073	2.5" Octagon Collar EZ2 with Hardfacing	JT1720 / JT2020M1 / JT2720 / JT2720M1 / JT24
953-0074	2.75" Octagon Collar EZ3 with Hardfacing	JT3020 Mach1 / AT2720M1 / AT3020M1 / JT25
953-0075	3" Octagon Collar EZ2 with Hardfacing	JT4020 / JT4020M1
953-0258	4.125" Octagon Collar with Hardfacing	JT7020 / JT8020 / JT100
953-0220	2.75" Octagon Collar EZ2 with Hardfacing	JT2720M1 / JT25
953-0400	3" Octagon Collar EZ2 with Carbide Teeth & Hardfacing	JT4020 / JT4020M1
953-0541	2.5" Octagon Collars EZ2 with Carbide Teeth & Hardfacing	JT1720 / JT2020M1 / JT2720 / JT2720M1 / JT24



953-0073

STARTER RODS

Starter rods give you a non-torqued connection for safe, easy attachment of your drilling tools and reamers.

VERMEER® COMPATIBLE STARTER RODS

Part #	Description	Fits Model
953-0055	1.625" Low Profile Box x Firestick 200 (1.66) Box	D7x11 / D9x13 / D10x14 / D10x15
953-0051	2.125" Low Profile Box x Firestick 250 (1.90) Box	D16x20
953-0052	2.125" Low Profile Box x Firestick 400 (2.06) Box	D18x22 / D20x22 / D24x26
953-0191	2.125" Low Profile Box x Firestick 600 (2.375) Box	D24x40
953-0050	2.125" Low Profile Box x Firestick 602 (2.375) Box	D33x44 / D36x50
953-0053	2.125" Low Profile Box x Firestick 650 (2.375) Box	D33x44 / D36x50
953-0054	2.125" Low Profile Box x Firestick 700 (2.625) Box	D36x50
953-0215	2.125" Low Profile Box x 2.375" Firestick 600 Pin 22.5" OAL	24x40 / JT25
953-0264	2.125" Low Profile Box x 2.375" Firestick 600 Pin 22.5" OAL	JT20 / JT25
953-0278	1.66" Firestick 200 Box x Quickfire 300 Compatible Box	D7x11 / D10x14 / D10x15
953-0279	1.90" Firestick 250 Box x Quickfire 400 Compatible Box	D16x20
953-0280	2.06" Firestick 400 Box x Quickfire 400 Compatible Box	D18x22 / D20x22 / D24x26
953-0281	2.375" Firestick 600 Box x Quickfire 400 Compatible Box	D24x40



953-0055

VERMEER® COMPATIBLE STARTER RODS (CONTINUED)

Part #	Description	Fits Model
953-0282	2.375" Firestick 600 Box x Quickfire 460 Compatible Box	D24x40
953-0283	2.375" Firestick 650 Box x Quickfire 460 Compatible Box	D36x50
953-0284	2.625" Firestick 700 Box x Quickfire 460 Compatible Box	D36x50
953-0438	2.625" Low Profile Box x Firestick 400 (2.06) Pin	JT1220/20x22

COMPATIBLE QUICK CONNECTS

Part #	Description	Fits Model
953-0221	2.125" Low Profile Box x 1.94" – 4 Ditch Witch Pin	JT2020
953-0253	2.125" Low Profile Box x 2.11" – 4 Ditch Witch Pin	JT2720M1 / JT3020M1
953-0401	2.75" EZ2 Pin x 2.375" Firestick 600 Pin	JT25 / JT2720M1
953-0406	1.31-6 EZ2 Pin, 1.1–5 DW Pipe Pin	JT5
953-0553	2.375" Firestick 600 / 2.25 MEZ3 Pin	JT25
953-0565	2.00-6 EZ2 Pin x 2-3/8"FS1 Pin	JT20 / JT20/20

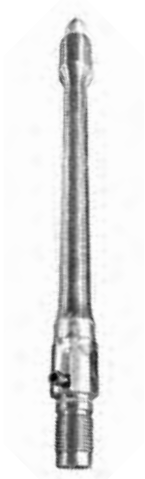

953-0401

DITCH WITCH® COMPATIBLE QUICK CONNECTS

Part #	Description	Fits Model
953-0059	1.21 M / 1.31 M EZ2	JT5 / JT520
953-0060	1.41 M / 1.63 M EZ2	JT920 / JT920L / JT922 / JT921
953-0061	1.3 M / 1.63 M EZ2	JT922 Coarse
953-0062	1.47 M / 1.88 M EZ3	JT1220
953-0063	1.69 M / 2.0 M EZ2	JT1720
953-0064	1.94 M / 2.0 M EZ2	JT2020
953-0065	1.94 M / 2.0 M EZ2	JT2720
953-0066	2.11 M / 2.25 M EZ2	JT2720 Mach 1
953-0067	2.11 M / 2.0 M EZ2	JT2720 Mach 1
953-0068	2.11 M / 2.25 M EZ3	JT3020 Mach 1
953-0069	2.59 M / 2.63 M EZ2	JT4020 Mach 1
953-0241	2.77 M / 2.25 M EZ3	JT2720AT / JT3020AT
953-0234	2.40 M / 2.63 M EZ2	JT4020
953-0287	3.27 M / 3.5 M EZ	JT7020 / JT8020 / JT100M1
953-0406	1.10 M / 1.31 M EZ2	JT5
953-0401	2.375" FS1 (600) / 2.25 M EZ2	JT25
953-0552	1.76 M / 2.0 M EZ2	JT24
953-0554	2.10 M / 2.63 M EZ2 Pin	JT40
953-0556	2.46-4 M / 2.85 M EZ2 Pin	JT60

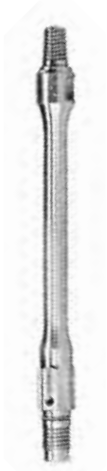

953-0059

DIRECT CONNECT FLEX RODS

Part #	Description	Fits Model
953-0589	2-3/8" Reg Pin x VM Firestick 600 Pin	JT20 - 20/20
953-0588	2-7/8" Reg Pin x 2.10 DW Pin	JT40
953-0587	2-3/8" Reg Pin x 2.10 DW Pin	JT40
953-0586	2-3/8" Reg Pin x 2.11 DW Pin	JT27/20 - JT30/20
953-0585	2" IF Pin x 1.30 DW Pin	JT922
953-0582	600 Firestick PxP x 24" S to S	JT20 - JT20/20
953-0584	2-3/8" Reg Pin x 1.76-4 DW Pin	JT24

ADAPTERS & SUBS

WE OFFER MORE ADAPTERS AND CROSSOVER SUBS THAN ANYONE

DITCH WITCH® COMPATIBLE ADAPTERS

Part #	Description	Fits Model
953-0302	1.66" Firestick Pin x 1.31"-6 EZ2 Box	JT520 / JT5
953-0303	1.66" Firestick Pin x 1.21"-6 Pipe Pin	JT520 / JT5
953-0301	1.66" Firestick Pin x 1.30"-5 DW Pipe Pin	JT922
953-0353	1.94-4 DW Pin x 2.0-6 EZ2 Box	JT1720 / JT1720M1 / JT2020M1 / JT2720
953-0259	1.94-4 DW Pin x 2.25-6 EZ3 Box	JT3020M1
953-0437	1.94-4 DW Pin x 1.69-6 Dw Pipe Pin	JT1720 / 1720M1
953-0570	2" IF Pin x Hawkeye 275 Pin	DW
953-0562	2" IF Pin x 1.10" - 5 Pipe Pin	JT5
953-0076	2" IF Pin x 1.21"-6 Pipe Pin	JT520 / JT5
953-0077	2" IF Pin x 1.41"-6 Pipe Pin	JT920 / JT920L / JT921 / JT922
953-0078	2" IF Pin x 1.47"-4 Pipe Pin	JT1220 Mach 1
953-0079	2" IF Pin x 1.69"-6 Pipe Pin	JT1720 / JT1720 Mach 1
953-0080	2" IF Pin x 1.94"-4 Pipe Pin	JT2020 Mach 1 / JT2720
953-0081	2" IF Pin x 2.11"-4 Pipe Pin	JT2720 Mach 1 / JT3020 Mach 1
953-0082	2" IF Pin x 1.31"-6 EZ2 Box	JT520 / JT5
953-0083	2" IF Pin x 1.63"-6 EZ2 Box	JT920 / JT920L / JT921 / JT922
953-0084	2" IF Pin x 1.88"-6 EZ3 Box	JT1220 Mach 1
953-0085	2" IF Pin x 2"-6 EZ2 Box	JT1720 / JT1720 Mach 1 / JT2020 Mach 1 / JT2720
953-0086	2" IF Pin x 2.25"-6 EZ2 Box	JT2720 Mach 1
953-0479	2" IF Pin x 1.30" Pipe Pin (922 Coarse)	
953-0087	2" IF Pin x 2.25"-6 EZ3 Box	JT3020 Mach 1
953-0592	2.77" Hex x 2.36" Hex AT	DW
953-0568	2.375" Reg Pin x Hawkeye 350 Pin	DW
953-0088	2.375" Reg Pin x 1.69"-6 Pipe Pin	JT1720 / JT1720 Mach 1
953-0089	2.375" Reg Pin x 1.94"-4 Pipe Pin	JT2020 Mach 1 / JT2720
953-0090	2.375" Reg Pin x 2.11"-4 Pipe Pin	JT2720 Mach 1 / JT3020 Mach 1
953-0091	2.375" Reg Pin x 2.4"-4 Pipe Pin	JT4020
953-0092	2.375" Reg Pin x 2.59"-4 Pipe Pin	JT4020 Mach 1
953-0093	2.375" Reg Pin x 2"-6 EZ2 Box	JT1720 / JT1720 Mach 1 / JT2020 Mach 1 / JT2720
953-0094	2.375" Reg Pin x 2.25"-6 EZ2 Box	JT2720 Mach 1
953-0095	2.375" Reg Pin x 2.25"-6 EZ3 Box	JT3020 Mach 1
953-0096	2.375" Reg Pin x 2.63"-6 EZ2 Box	JT4020 / JT4020 Mach 1 / AT2720 / AT3020
953-0319	2.375" Reg Pin x 2.77"-4 AT Pin	2720AT / 3020AT
953-0229	2.375" Reg Pin x 1.47-4 Pin	JT1220
953-0216	SUB 2.375" Reg Pin x 1.88 EZ3 DW Box	JT1220
953-0490	2.375" Reg Pin x 2.95" DW AT Pipe Pin	AT40
953-0532	2.375" Reg Pin x 2.10" DW Pin	AT40
953-0584	2.375" Reg Pin x 1.76" -4 Pin	JT24
953-0535	2.375" Reg Pin x 3.25" DW AT Pin	
953-0219	SUB 2.375" Reg Pin x 1.63 EZ2 DW Box	JT920 / JT920L / JT921 / JT922
953-0236	SUB 2.375" Reg Pin x 2.59-4 DW Box	JT4020 / 4020M1
953-0097	2.875" Reg Pin x 2.11"-4 Pipe Pin	JT2720 Mach 1 / JT3020 Mach 1
953-0098	2.875" Reg Pin x 2.4"-4 Pipe Pin	JT4020
953-0099	2.875" Reg Pin x 2.59"-4 Pipe Pin	JT4020 Mach 1
953-0100	2.875" Reg Pin x 3.27"-4 Pipe Pin	JT7020 / JT8020 / JT100



953-0303



953-0088



953-0236

DITCH WITCH® COMPATIBLE ADAPTERS (CONTINUED)

Part #	Description	Fits Model
953-0101	2.875" Reg Pin x 2.25"-6 EZ2 Box	JT2720 Mach 1
953-0102	2.875" Reg Pin x 2.25"-6 EZ3 Box	JT3020 Mach 1
953-0103	2.875" Reg Pin x 2.63"-6 EZ2 Box	JT4020 / JT4020 Mach 1
953-0255	2.875" Reg Pin x 3.5" Firestick 802 Pin	JT7020 / JT8020 / JT100M1
953-0316	2.875" Reg Pin x 3.25"-4 AT Pin	JT4020AT
953-0317	2.875" Reg Pin x 3.44"-4 AT Pin	AT100
953-0318	2.875" Reg Pin x 2.77"-4 AT Pin	2720AT / 3020AT
953-0491	2.875" Reg Pin x 2.95" AT Pipe Pin	AT40
953-0534	2.875" Reg Pin x 2.10" Pin	JT40
953-0507	2.875" Reg Pin x 2.46-4 Pin	JT60
953-0238	SUB - 2.875" Reg Pin	2.875" IF Box
953-0104	3.5" IF Pin x 3.27"-4 Pipe Pin	JT7020 / JT8020 / JT100
953-0295	3.5" Reg Pin x 2.59"-4 DW Pin	JT4020 / JT4020M1
953-0296	3.5" Reg Pin x 3.27"-4 DW Pin	JT7020 / JT8020 / JT100M1
953-0297	3.5" Reg Pin x 2.63"-6 EZ2 Box	JT4020 / JT4020M1
953-0311	3.5" Reg Pin x 2.11"-4 DW Pin	JT3020M1
953-0312	3.5" Reg Pin x 3.5"-6 EZ2 Box	JT7020 / JT8020 / JT100M1
953-0313	3.5" Reg Pin x 3.25"-4 AT Pin	JT4020AT
953-0314	3.5" Reg Pin x 3.44"-4 AT Pin	AT100
953-0315	3.5" Reg Pin x 2.77"-4 AT Pin	2720AT / 3020AT
953-0228	2" IF Pin	20K Pulling Eye
953-0223	2.375" Reg Pin	30K Pulling Eye
953-0459	2.375" Reg Pin	30K Pulling Eye, 1.25" Wide Tab
953-0555	2.875" Reg Pin x 2.85" EZ2 Box	JT60
953-0405	2.375" Reg Pin x 2.375" Firestick 900 Pin	JT24 / JT25
953-0262	2.375" Reg Pin x Quickfire 400 Compatible Pin	D16x20, D18x22, D20x22, D23x30, D24x26, D24x40
953-0288	2.375" Reg Pin x Quickfire 460 Compatible Pin	D24x40, D36x50, 40x55
953-0354	2.375" Firestick 600 Pin x Quickfire 400 Compatible Pin	D16x20, D18x22, D20x22, D23x30, D24x26, D24x40
953-0355	2.375" Firestick 600 Pin x Quickfire 460 Compatible Pin	D24x40, D36x50, 40x55
953-0248	2.875" Reg Pin	50K Pulling Eye
953-0460	2.875" Reg Pin	50K Pulling Eye, 1.25" Wide Tab
953-0358	3.5" Firestick (800) Box	50K Pulling Eye
953-0356	3.5" Reg Pin	100K Pull Tab
953-0357	3.5" IF Pin	100K Pull Tab
953-0369	2.59-4 DW Pin	2.125" Low Profile Pin
953-0342	6.625" Reg Box	4.5" Reg Pin
953-0360	2.875" IF Box x 2.625" Firestick 700 Pin	(700) 4.25" OD, 6.5" S to S
953-0361	2.875" IF Box x 3.5" Firestick 800 Pin	(800) 4.25" OD, 6.5" S to S
953-0362	2.875" IF Box x 2.875" Firestick 900 Pin	(900) 4.25" OD, 6.5" S to S
953-0363	2.875" IF Box x 3.5" Firestick 1000 Pin	(1000) 4.25" OD, 6.5" S to S
953-0374	6.625" Full Hole Box x 5.5" Full Hole Pin	5.5" Full Hole Pin, 16" S to S
953-0375	5.5" Full Hole Box x 5.5" Full Hole Pin	14" S to S, 7.5" OD


953-0311


953-0248

ADAPTERS & SUBS
CONTINUED

VERMEER® COMPATIBLE ADAPTERS

Part #	Description	Fits Model
953-0222	1.94" Ditch Witch Pin x 2.125" Low Profile Pin 14" OAL	D16x20 thru D36x50
953-0105	2" IF Pin x 1.66" Firestick® 200 Box	D6x6 / D7x11 / D9x13 / D10x15
953-0106	2" IF Pin x 1.90" Firestick 250 Box	D16x20 / D18x22
953-0107	2" IF Pin x 2.06" Firestick 400 Box	D20x22 / D24x26
953-0108	2" IF Pin x 2.375" Firestick 600 Box	D24x40 / D24x40 II / D40x40
953-0109	2" IF Pin x 1.625" Low Profile Pin	D6x6 / D9x13 / D10x15
953-0110	2" IF Pin x 2.125" Low Profile Pin	D16x20 Thru D36x50
953-0210	2" IF Pin x 2.375" Firestick 650 Box	DD33x44 / DD36x50
953-0343	Sub 2" IF Pin	RM16 Pin (QF 460 Compatible)
953-0289	Sub 2" IF Pin	RM13 PIN (QF 300 Compatible)
953-0290	Sub 2" IF Pin	RM14 Pin (QF 400 Compatible)
953-0590	2.375" Reg Pin x 1.66" Firestick 200 Box	D6x6 / D9x13 / D10x15
953-0550	2.125" LPT Slip Over x 2.375" Reg Box, 9" OAL	
953-0513	2.375" Reg Pin x RM13 Pin	
953-0111	2.375" Reg Pin x 1.66" Firestick 200 Box	D6x6 / D9x13 / D10x15
953-0112	2.375" Reg Pin x 1.90" Firestick 250 Box	D16x20 / D18x22
953-0113	2.375" Reg Pin x 2.06" Firestick 400 Box	D20x22 / 24x26
953-0114	2.375" Reg Pin x 2.375" Firestick 600 Box	D24x40 / D24x40 II / D40x40
953-0405	2.375" Reg Pin x 2.375" Firestick 600 Pin	D24x40 / D24x40 II / D40x40
953-0115	2.375" Reg Pin x 2.375" Firestick 650 Box	D36x50
953-0116	2.375" Reg Pin x 2.625" Firestick 700 Box	D36x50
953-0117	2.375" Reg Pin x 1.625" Low Profile Pin	D6x6 / D9x13 / D10x15
953-0118	2.375" Reg Pin x 2.125" Low Profile Pin	D16x20 Thru D36x50
953-0231	2.375" Reg Pin x 3.5" Firestick 800 Box	D50x100 / D80x100 / D80x120 / D100x120
953-0505	3.5" Firestick (800) Box x 3.5" Firestock 800 Box	
953-0254	2.375" Reg Pin x 2.875" Firestick 900 Box	D50x100
953-0344	2.375" Firestick 600 Pin x 2.125" Low Profile Pin	D16x20 thru D36x50
953-0436	2.375" Firestick 600 Pin x 2.06" Firestick 400 Box	D20x22 / D24x26
953-0262	Sub 2.375" Reg Pin	RM14 Pin (QF 400 Compatible)
953-0288	Sub 2.375" Reg Pin	RM16 PIN (QF 460 Compatible)
953-0354	Sub 2.375" Firestick 600 x RM13	RM14 Pin (QF 400 Compatible)
953-0355	Sub 2.375" Firestick 600 x RM16	RM16 Pin (QF 460 Compatible)
953-0119	2.875" Reg Pin x 2.375" Firestick 600 Box	D24x40 / D24x40 Series II / D40x40
953-0120	2.875" Reg Pin x 2.875" Firestick 900 Box	D50x100
953-0121	2.875" Reg Pin x 3.5" Firestick 800 Box	D50x100 / D80x100 / D80x120 /D100x120
953-0122	2.875" Reg Pin x 2.375" Firestick 650 Box	D36x50
953-0511	2.875" IF Pin x 3.5" Firestick 1000 Box	
953-0123	2.875" Reg Pin x 2.625" Firestick 700 Box	D36x50
953-0124	2-7/8" Pin x FS1000 box	D100x120
953-0125	2.125" Low Profile Pin	D16x20 Thru D36x50
953-0250	2.875" Reg Pin x 3.5" Firestick 802 Box	D80x100 / D100x120 / D50x100 / D80x120
953-0291	Sub 2.875" Reg Pin	RM14 Pin (QF 400 Compatible)
953-0292	Sub 2.875" Reg Pin	RM16 Pin (QF 460 Compatible)
953-0126	3.5" IF Pin x 3.5" Firestick 800 Box	D50x100 / D80x100 / D100x120
953-0127	3.5" IF Pin x 3.5" Firestick 1000 Box	D100x120
953-0298	3.5" Reg Pin x 2.875" Firestick 900 Box	D50x100 / D60x90
953-0299	3.5" Reg Pin x 3.5" Firestick 800 Box	D50x100 / D80x100 / D100x120


953-0106


953-0405


953-0120


953-0126

VERMEER® COMPATIBLE ADAPTERS (CONTINUED)

Part #	Description	Fits Model
953-0300	3.5" Reg Pin x 3.5" Firestick 1000 Box	D100x120
953-0294	3.5" Reg Pin x Quickfire 460 Compatible Pin	RM16 Pin (QF 460 Compatible)
953-0480	3.5" Firestick 1000 Box x 100k Pull Tab	
953-0514	3.5" Firestick 1000 Pin x 3.5" Firestick 800 Box	
953-0505	3.5" Firestick 1 800 Box x 3.5" Firestick 1 800 Box	
953-0522	3.5" Reg Pin x 3.5" Firestick 1000 Pin	
953-0516	3.5" Firestick 1000 Pin x 3.5" Firestick 1000 Pin	
953-0516	3.5" Firestick 1000 Box x 3.5" Firestick 800 Pin	

API ADAPTERS

Part #	Description	Fits Model
953-0537	2.875" Reg Box, Ø4" x 2.375" Reg Pin	
953-0452	2.875" Reg Pin x 3.5" Reg Box, 12" OAL	
953-0477	3.5" Reg Pin x 3.5" IF Box	

AT32 TO AT30 CONVERSION ASSEMBLY

Part #	Description	Fits Model
953-0593	AT32 to AT30 Conversion Assembly	

2700 SERIES CONNECTIONS

DITCH WITCH® 2700 SERIES PIPE CONNECTIONS

Part #	Description	Connection	Fits Model
953-0076	2" IF Pin x 1.21"-6 Pipe Pin	Ditch Witch	JT5 / JT 520
953-0077	2" IF Pin x 1.41"-6 Pipe Pin	Ditch Witch	JT 920 / JT 920L / JT 921 / JT 922
953-0078	2" IF Pin x 1.47"-4 Pipe Pin	Ditch Witch	JT1220 Mach 1
953-0079	2" IF Pin x 1.69"-6 Pipe Pin	Ditch Witch	JT 1720 / JT 1720 Mach 1
953-0080	2" IF Pin x 1.94"-4 Pipe Pin	Ditch Witch	JT 2020 Mach 1 / JT 2720
953-0081	2" IF Pin x 2.11"-4 DW Pin	Ditch Witch	JT2720M1 / JT3020M1


953-0079

DITCH WITCH® 2700 SERIES EZ CONNECTIONS

Part #	Description	Connection	Fits Model
953-0082	2" IF Pin x 1.31"-6 EZ2 Box	Ditch Witch	JT5 / JT520
953-0083	2" IF Pin x 1.63"-6 EZ2 Box	Ditch Witch	JT920 / JT920L / JT921 / JT922
953-0084	2" IF Pin x 1.88"-6 EZ3 Box	Ditch Witch	JT1220 Mach 1
953-0085	2" IF Pin x 2"-6 EZ2 Box	Ditch Witch	JT1720 / JT1720 Mach 1 / JT2020 Mach 1 / JT2720
953-0086	2" IF Pin x 2.25"-6 EZ2 Box	Ditch Witch	JT2720 Mach 1
953-0087	2" IF Pin x 2.25"-6 EZ3 Box	Ditch Witch	JT3020 Mach 1


953-0084

ADAPTERS & SUBS
CONTINUED

VERMEER® 2700 SERIES PIPE CONNECTIONS

Part #	Description	Connection	Fits Model
953-0105	2" IF Pin x 1.66" Firestick 200 Box	Vermeer	D6x6 / D9x13 / D10x15 / D7x11
953-0106	2" IF Pin x 1.90" Firestick 250 Box	Vermeer	D16x20 / D18x22
953-0107	2" IF Pin x 2.06" Firestick 400 Box	Vermeer	D20x22 / D24x26
953-0108	2" IF Pin x 2.375" Firestick 600 Box	Vermeer	D24x40 / D24X40 II / D40x40


953-0105

VERMEER® 2700 SERIES QUICK CONNECTS

Part #	Description	Connection	Fits Model
953-0109	2" IF Pin x 1.625" Low Profile Pin	Vermeer	D6x6 / D7x11 / D9x13 / D10x15
953-0110	2" IF Pin x 2.125" Low Profile Pin	Vermeer	D16x20 thru D36x50


953-0109

3000 SERIES CONNECTIONS

3000 SERIES PIPE CONNECTIONS

Part #	Description	Connection	Fits Model
953-0131	3" R-Box x 2.375" API REG Box	API	

DITCH WITCH® 3000 SERIES CONNECTIONS

Part #	Description	Connection	Fits Model
953-0149	3" R-Box x 1.47"-4 Pipe Pin	Ditch Witch	JT1220 Mach 1
953-0153	3" R-Box x 1.94"-4 Pipe Pin	Ditch Witch	JT2020M1 / JT27420

DITCH WITCH® 3000 SERIES EZ CONNECTIONS

Part #	Description	Connection	Fits Model
953-0150	3" R-Box x 1.88"-6 EZ3 Box	Ditch Witch	JT1220 Mach 1
953-0151	3" R-Box x 2"-6 EZ2 Box	Ditch Witch	JT1720 / JT2020M1 / JT2720
953-0152	3" R-Box x 2.25"-6 EZ2 Box	Ditch Witch	JT2720M1

VERMEER® 3000 SERIES PIPE CONNECTIONS

Part #	Description	Connection	Fits Model
953-0169	3" R-Box x 1.90" Firestick 250 Box	Vermeer	D16x20 / D18x22
953-0170	3" R-Box x 2.06" Firestick 400 Box	Vermeer	D20x22 / D24x26
953-0167	3" R-Box x 2.375" Firestick 600 Box	Vermeer	D24x40 / D24X40 II / D40x40

VERMEER® 3000 SERIES QUICK CONNECTS

Part #	Description	Connection	Fits Model
953-0168	3" R-Box x 2.125" Low Profile Pin	Vermeer	D16x20 Thru D36x50
953-0193	Radius Sub - 3.0" R-BOX	Vermeer	RM14 Pin (QF 400 Compatible)


953-0168

3500 SERIES PIPE CONNECTS

Part #	Description	Connection	Fits Model
953-0133	3.5" R-Box x 2.375" API Reg Box	API	



953-0133

DITCH WITCH® 3500 SERIES PIPE CONNECTIONS

Part #	Description	Connection	Fits Model
953-0157	3.5" R-Box x 2.11"-4 Pipe Pin	Ditch Witch	JT2720M1 / JT3020M1
953-0159	3.5" R-Box x 2.40"-4 Pipe Pin	Ditch Witch	JT4020
953-0161	3.5" R-Box x 2.59"-4 Pipe Pin	Ditch Witch	JT4020M1
953-0194	3.5" R-Box x 2.59"-4 Pipe Box	Ditch Witch	JT4020M1
953-0162	3.5" R-Box x 2.77"-4 Pipe Pin	Ditch Witch	JT2720AT / JT3020AT

DITCH WITCH® 3500 SERIES EZ PIPE CONNECTIONS

Part #	Description	Connection	Fits Model
953-0158	3.5" R-Box x 2"-6 EZ2 Box	Ditch Witch	JT2720
953-0154	3.5" R-Box x 2.25"-6 EZ2 Box	Ditch Witch	JT2720M1
953-0160	3.5" R-Box x 2.25"-6 EZ3 Box	Ditch Witch	JT3020M1
953-0155	3.5" R-Box x 2.63"-6 EZ2 Box	Ditch Witch	JT4020 / JT4020M1



953-0158

VERMEER® 3500 SERIES PIPE CONNECTIONS

Part #	Description	Connection	Fits Model
953-0171	3.5" R-Box x 2.375" Firestick 600 Box	Vermeer	D24x40 / D24X40 II / D40x40
953-0174	3.5" R-Box x 2.375" Firestick 650 Box	Vermeer	D36x50
953-0192	3.5" R-Box x 2.625" Firestick 700 Box	Vermeer	D36x50
953-0173	3.5" R-Box x 2.875" Firestick 900 Box	Vermeer	D50x100
953-0251	3.5" R-Box x 2.375" Firestick 600 (12" OAL)	Vermeer	D24x40 / D24x40 Series II / D40x40
953-0252	3.5" R-Box x 2.625" Firestick 700 (12" OAL)	Vermeer	D36x50 / D36x50 Series II

VERMEER® 3500 SERIES QUICK CONNECTS

Part #	Description	Connection	Fits Model
953-0172	3.5" R-Box x 2.125" Low Profile Pin	Vermeer	D16x20 thru D36x50
953-0249	3.5" R-Box x Quickfire 400 Compatible Pin	Vermeer	RM14 Pin (QF 400 Compatible)
953-0307	3.5" R-Box x Quickfire 460 Compatible Pin	Vermeer	RM16 Pin (QF 460 Compatible)



953-0172

> ***FRIENDLY AND FAST SERVICE,*** *WAS IN A PINCH AND NEEDED DOWN HOLE WIRE AND THEY DELIVERED.*
>
> RICKY THARP II

ADAPTERS & SUBS
CONTINUED

4500 SERIES CONNECTIONS

4500 SERIES PIPE CONNECTIONS

Part #	Description	Connection	Fits Model
953-0139	4.5" R-Box x 2.875" API Reg Pipe Box	API	
953-0137	4.5" R-Box x 2.875" IF Pipe Box	IF	DD6 / DD10
953-0138	4.5" R-Box x 3.5" IF Pipe Box	IF	



953-0139

DITCH WITCH® 4500 SERIES PIPE CONNECTIONS

Part #	Description	Connection	Fits Model
953-0186	4.5" R-Box x 2.59"-4 Pipe Pin	Ditch Witch	JT4020M1
953-0187	4.5" R-Box x 3.25"-4 Pipe Pin	Ditch Witch	AT4020
953-0213	Radius Sub - 4.5" R-Box DW 3.27 Box	Ditch Witch	JT7020 / JT8020 / JT100
953-0558	4.5" R-Box x 2.46"-4 Pin	Ditch Witch	JT40

VERMEER® 4500 SERIES PIPE CONNECTIONS

Part #	Description	Connection	Fits Model
953-0177	4.5" R-Box x 2.875" Firestick 900 Box	Vermeer	D50x100
953-0175	4.5" R-Box x 3.5" Firestick 800 Box	Vermeer	D50x100
953-0176	4.5" R-Box x 3.5" Firestick 900 Box	Vermeer	D80x100 / 100x120
953-0239	4.5" R-Box x 3.5" Firestick 1000 Box	Vermeer	D100x120 / D100x140



953-0176

5000 SERIES CONNECTIONS

5000 SERIES PIPE CONNECTIONS

Part #	Description	Connection	Fits Model
953-0142	5" R-Box x 3.5" IF Pipe Box	IF	
953-0178	5" R-Box x 3.5" Firestick 800 Box	Vermeer	D80x100 / 100x120
953-0184	5" R-Box x 3.5" Firestick 900 Box	Vermeer	D80x100 / 100x120
953-0182	5" R-Box 3.5" Firestick 1000 Box	Vermeer	D100x120 / D100x140
953-0561	5" R-Box x 3.27"-4 Pin	Ditch Witch	JT7020 / JT8020 / JT100

6500 SERIES CONNECTIONS

6500 SERIES PIPE CONNECTIONS

Part #	Description	Connection
953-0144	6" R-Box x 4.5" IF Pipe Box	IF

HOUSINGS

THE TOUGHEST, MOST VERSATILE HOUSING AVAILABLE.

No other can come close to a *Radius Housing.*

Our housings are built to a higher standard than anything else on the market. Only Radius protects the beacon with a unique lid-locking mechanism for a more reliable closure throughout drilling.



Rock Housings



Box x Box Sonde Housing



End Load Sonde Housing

UNDERGROUND MAGNETIC HOUSINGS

Part #	Description	Diam.	Connection	Electronics	Rig Class
951-3502	3500 Series Underground Magnetic	3.5"	2.375" Reg Box x 3500 R-Pin	15" & 19" Digitrak®, Subsite® 86 Series, 15" & 18" Underground Magnetics	24-44K
951-4502	4500 Series Underground Magnetic End Load, Hi-Flo	4.5"	2.875" Reg Box x 2.875" IF Box	15" & 19" Digitrak®, Subsite® 86 Series, 15" & 18" Underground Magnetics	40-100K
951-5002	5000 Series Underground Magnetic End Load, Hi-Flo	5"	3.5" IF Box x 3.5" Reg Box	15" & 19" Digitrak® & 15",18",19" & 24" Underground Magnetics	100-250K
951-6502	6500 Series Underground Magnetic End Load, Hi-Flo	6.5"	4.5" IF Box x 4.5" Reg Box	15" & 19" Digitrak® & 15",18",19" & 24" Underground Magnetics	250-600K

ROCK HOUSINGS

Part #	Description	Diam.	Connection	Electronics	Rig Class
951-2750	2700 Series	2.75"	2" IF Box x Box	15" Digitrak	6-14K
951-2751	2700 Series	2.75"	2" IF Box x Box	Subsite 86 Series	6-14K
951-3000	3000 Series	3.25"	2" IF Box x 3000 Radius Pin	15" Digitrak & Subsite 86 Series	15-22K
951-3500	3500 Series	3.5"	2.375" Reg Box x 3500 Radius Pin	15" & 19" Digitrak & Subsite 86 Series	24-44K
951-3510	3500 Series-High Flow	3.5"	2.375" Reg Box x 3500 Radius Pin	15" & 19" Digitrak & Subsite 86 Series	24-44K
951-3505	3500 Series-High Flow	3.5"	2" IF Box x 3500 Radius Pin	15" & 19" Digitrak & Subsite 86 Series	24-44K
951-4500	4500 Series-High Flow	4.5"	2.875" Reg Box x 4500 Radius Pin	15" & 19" Digitrak & Subsite 86 Series	40-100K
951-5000	5000 Series-High Flow	5"	3.5" Reg Box x 5000 Radius Pin	15" & 19" Digitrak & Subsite 86 Series	100-250K
951-6500	6500 Series-High Flow	6.5"	4.5" Reg Box x 6500 Radius Pin	15" & 19" Digitrak & Subsite 86 Series	250-600K

> ***I TELL ANYONE WHO ASKS ME ABOUT TOOLING THAT RADIUS IS WHO TO CALL.*** *THEY HAVE THE BEST TOOLING FOR THE BEST COST AND WILL HAVE IT IN YOUR HANDS IN LESS THAN 36 HOURS.* ***KEEP UP THE GREAT WORK GUYS.***
>
> CHRIS SPEARMAN

HOUSINGS
CONTINUED

SONDE HOUSINGS

BOX X BOX

The Radius Box x Box Sonde Housing offers unmatched flexibility in connections and tooling, perfect for medium to hard ground conditions and built with the same Radius durability in mind.

Part #	Description	Diam.	Connection	Electronics	Rig Class
951-2750	2700 Series Rock Housing	2.75"	2" IF Box x Box	15" Digitrak	6-14K
951-2751	2700 Series Rock Housing	2.75"	2" IF Box x Box	Subsite 86 Series	6-14K
951-3020	3000 Series Rock Housing	3"	2" IF Box x Box	Subsite 86 Series	15-22K
951-3030	3000 Series Rock Housing	3.25"	2" IF Box to Box (DCI)	Digitrak 15"	15-22K
951-3040	3000 Series Rock Housing	3"	2" IF Box x Box	Universal	15-22K
951-3520	3500 Series Rock Housing	3.5"	2.375" API Reg Box to Box (Subsite)	Subsite 86 Series	24-44K
951-3530	3500 Series Rock Housing	3.5"	2.375" API Reg Box to Box (DCI)	Digitrak 15"	24-44K
951-3540	3500 Series Rock Housing	3.5"	2.375" Reg Box x 2.375" Reg Box	Universal	24-44k
951-4520	4500 Series Rock Housing	4.25"	2.875" API Reg Box to Box (Subsite)	Subsite 86 Series	50-100K
951-4530	4500 Series Rock Housing	4.25"	2.875" API Reg Box to Box (DCI)	Digitrak 15"	50-100K
951-4540	4500 Series Rock Housing	4.25"	2.875" Reg Box x 2.875" Reg Box	Universal	40-100K

END LOAD

Only Radius offers side load housings with a patented small access window. Only drillers who have wasted hours digging their sonde out of a typical end load housing know why we do.

Part #	Description	Diam.	Connection	Electronics	Rig Class
951-4501	End Load Housing (DCI)	4.5"	2.875" IF Box x 2.875" Reg Box	DCI 15 & 19"	50-100K
951-5001	End Load Housing (DCI)	5"	3.5" IF Box x 3.5" Reg Box	DCI 15 & 19"	100-250K
951-6501	End Load Housing (DCI)	6.5"	4.5" IF Box x 4.5" Reg Box	DCI 15 & 19"	250K-600K
951-7001	End Load Housing (DCI)	7.25"	DS55 Box x 4.5" Reg Box	DCI 15 & 19"	350K-600K
951-8001	End Load Housing (DCI)	9"	DS55 Box x 4.5" Reg Box	DCI 15 & 19"	440K-1M

RIG COMPATABILITY

Vermeer® Ditch Witch®

Series	Fits Vermeer® Model
2700	D7x11 / D7x11 Series II / D9x13 Series II / D10x14 / D10x15
3000	D16x20 / D16x20 Series II / D18x22 / D20x22 / D20x22 Series II / D20x22 FX
3500	D24x40A / D24x40 Series II / D33x44 / D36x50 / D36x50 Series II
4500	D50x100A / D60x90 / D80x100 Series II / D100x120 / D100x120 Series II / D100x140
5000	D100x120 / D100x120 Series II / D100x140
6500	D330x500 / D500x500

Series	Fits Ditch Witch® Model
2700	JT920 / JT920L / JT921 / JT922 / JT1220
3000	JT1220 Mach1 / JT1720 / JT1720 Mach1 / JT2020 Mach1
3500	JT25 / JT2720 / 2720M1 / AT2720 / JT3020M1 / AT3020 / JT4020 / JT4020M1 / JT4020M1
4500	JT7020 Mach1 / JT8020 Mach1 / JT100 / AT100
5000	JT100 / AT100

Radius Quality Rocks. Even In The Dirt.

Radius dirt housings are built to the same high standards as the rest of the Radius line. That means cheap doesn't cut it. Only radius protects the sonde with a unique lid-locking mechanism for complete and secure protection of your electronics. The replaceable tailpiece allows you to easily connect to any rig pipe or quick connect system.

VERMEER® DIRT HOUSINGS



952-0002

(ALL VERMEER COMPATIBLE DIRT HOUSINGS RUN DCI DIGITRAK 15" SONDES)

Part #	Diam.	Bolt Pattern	Connection	Fits Model
952-0002	2.5"	6 Bolt (.5"-13)	2" IF Box Thread	D7x11 / D7x11 Series II / D9x13 Series II / D10x14 / D10x15
952-0003	2.75"	6 Bolt (.5"-13)	2" IF Box Thread	D16x20 / D16x20 Series II / D18x22 / D20x22 / D20x22 Series II / D20x22 FX
952-0124	3"	6 Bolt (.5"-13)	2.375" Firestick I Box	D16x20 / D16x20 Series II / D18x22 D20x22 / D20x22 Series I
952-0005	3.25"	6 Bolt (.5"-13)	2.375" API Reg Box	D24x40A / D24x40 Series II / D33x44 / D36x50 / D36x50 Series II
952-0125	3.25"	6 Bolt (.5"-13)	2.375" Firestick I Box	D24x40 / D24x40 Series II / D33x44 / D36x50
952-0006	4.25"	6 Bolt (.625"-11)	2.875" API Reg Box	D50x100A / D60x90 / D80x100 Series II / D100x120 / D100x120 Series II / D100x140
952-0135	4.5"	6 Bolt (.75" - 10)	3.5" Reg Box (DCI)	D100x120, D100x140
952-0198	2.25"	5 Bolt (.375-11)	2" IF Box Thread	D6x6

DITCH WITCH® DIRT HOUSINGS



952-0190

(ALL DITCH WITCH COMPATIBLE DIRT HOUSINGS RUN SUBSITE 86 SERIES BEACONS)

*Runs DW 88B mini beacon

Part #	Diam.	Bolt Pattern	Connection	Fits Model
952-0008	2.5"	5 Bolt (12mm)	2" IF Box Thread	JT920 / JT920L / JT921 / JT922
952-0009	2.75"	5 Bolt (12mm)	2" IF Box Thread	JT920 / JT920L / JT921 / JT922 / JT1220 Mach1 / JT1720 / JT1720 Mach1 / JT2020 Mach1
952-0010	3"	5 Bolt (12mm)	1.94-4 Ditch Witch Pipe Box	JT1220 Mach1 / JT1720 / JT1720 Mach1 / JT2020 Mach1
952-0011	3.25"	6 Bolt (16mm)	2.375" API Reg Box	JT25 / JT2720 / JT2720 Mach1 / AT2720 Mach1 / JT3020 Mach1 / AT3020 Mach1 / JT4020 / JT4020 Mach1 / AT4020
952-0012	4.25"	6 Bolt (20mm)	2.875" API Reg Box	JT7020 Mach1 / JT8020 Mach1 / JT100 / AT100
952-0190	2.25"	3 Bolt (12mm)	2" IF Box Thread	JT5 / JT520
952-0199	2.25"	3 Bolt (12mm)	2" IF Box Thread	JT5 / JT520

CALL, CLICK, TEXT.

We're here to help you find what you need, when you need it.

radius®

THE MAXI TOOLING EXPERTS

WHEN EVERYTHING MUST GO RIGHT.

NO ONE OFFERS MORE OPTIONS AND SOLUTIONS THAN RADIUS.

- Tricone, PDC and Offset Rock Bits
- Housings for Walk-Over and Wireline Systems
- Complete Wireline and Connection Supplies
- Mud Motor Rental and Sales
- Pipe Rollers
- Non-Mag Tools, Adapters and Monels
- Hole Openers and PDC Rock Reamers
- Broad Selection of Conventional Reamers (Winged, Paddle, Barrel)
- Fishing, Catch-Baskets & Chase Tools
- Drill Pipe (New and Used)
- Drilling Mud, Addities, and Shaker Screens
- PPP and Safety Equipment
- Subs and Cross-Over Adapters
- Job Site Logistics and Support

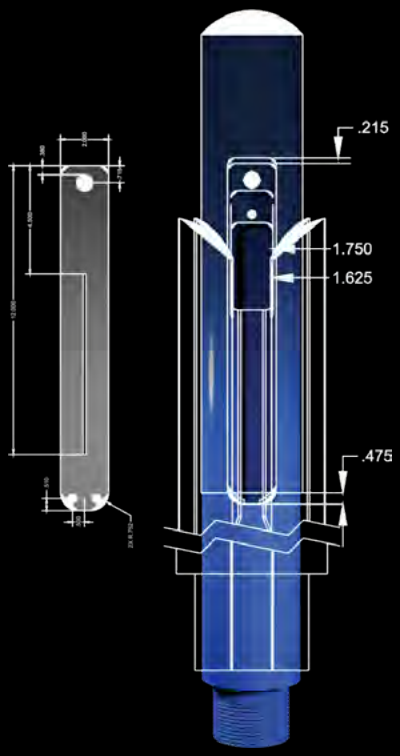

CALL TO LEARN MORE: 888-660-0793

YOU PUT IT ON PAPER

WE'LL GET IT TO THE SITE





THE MAXI TOOLING EXPERTS

ROCK TOOLS

CONTROLLED CUTTING, UNSURPASSED DURABILITY.

ROCK BITS

Our most versatile tool delivers greater steering and control in any type of soil conditions while letting you navigate loose rock and solid rock conditions, too. Combined with our patented Hot Shot pull-back adapter, it's one of the most popular bits on the market today.

CARBIDE BUTTONS

While competitive rock bits have pressed in buttons, Radius solders them in place. This allows us to use larger diameter carbides to grind cuttings more effectively so they flow more easily from the hole. It also provides better tool protection and delivers increased durability.

CENTER AXIS CUTTING DESIGN

Our thread-on bit design follows the centerline of the drill pipe and housing, minimizing vibration up the drill pipe and delivering greater control.

OVERSIZED TOOTH SHANKS

Broader at the base of the teeth, these provide added strength and durability in tough bores.

REINFORCED SECONDARY CROWN

Our secondary crown supports the cutting teeth in tough conditions, minimizing damage and wear to the tooth pocket.

MORE TUNGSTEN CARBIDE SURFACE

Experienced drillers know where the bit wears fastest. Radius builds-in added durability with precise carbide placement, extending the life of the tool and maintaining the level of control you need.

RECESSED WATER PORTS

While others put water ports on the cutting face where they can easily clog or wear, our recessed fluid ports are in the center of the bit to reduce the possibility of clogs and permanent bit damage

REAR WEAR PAD

Radius' raised wear pad keeps the cutting teeth "in the cut" for greater control and steering. The carbide-studded pad further grinds cuttings to a more "floatable" size for easier spoil removal and a cleaner hole.

KNOCKOUT HOLES

No matter what size Radius bit, our knockout holes are all an inch long or less. This makes it easier for you to replace worn and broken teeth.

STANDARD API THREADS

Allow easy connections to both our patented rock housings and other existing sonde housings on the market.

"OFF THE SHELF" COMPATIBILITY

We designed Radius bits to work with "off-the-shelf" trencher teeth, making replacement more convenient and more affordable for you.



PULL-BACK ADAPTER

HOT SHOT

With our patented Hot Shot Adapter, you don't have to waste time removing your bit to pull back. Just bolt on a Hot Shot and you're ready to go.



PART #: 3000 series: 954-0020 /
3500 Series: 954-0021 / 4500 Series: 954-0297

ROCK BITS (CONTINUED)

Part #	Diameter	Thread Connection	Cut Diameter	Rig Class
950-2750	2750 Series Rock Bit	2" IF Pin	4"	7-12K
950-3000	3000 Series Rock Bit	2" IF Pin	5"	12-22K
950-3500	3500 Series Rock Bit	2.375" Reg Pin	6"	24-40K
950-4500	4500 Series Rock Bit	2.875" Reg Pin	7"	50-100K
950-5000	5000 Series Rock Bit	3.5" Reg Pin	8"	100-250K
950-5001	5000 Series Rock Bit	3.5" IF Pin	8"	100-250K
950-6500	6500 Series Rock Bit	4.5" Reg Pin	10"	250-600K
950-8000	8000 Series Rock Bit	6.625" Reg Pin	14"	Over 600K
950-8002	8000 Series Rock Bit	4.5" Reg Pin	14"	Over 600K

RIG COMPATABILITY

Vermeer® Ditch Witch® American Auger®

Part #	Fits Vermeer® Model
950-2750	D7x11 / D7x11 Series II / D9x13 Series II / D10x14 / D10x15
950-3000	D16x20 / D16x20 Series II / D18x22 / D20x22 / D20x22 Series II / D20x22 FX
950-3500	D24x40A / D24x40 Series II / D33x44 / D36x50 / D36x50 Series II
950-4500	D50x100A / D60x90 / D80x100 Series II / D100x120 / D100x120 Series II / D100x140
950-5000	D100x120 / D100x120 Series II / D100x140
950-6500	D330x500 / D500x500
950-8000	D750x900 / D1000x900 / D1320x900
950-8001	D750x900 / D1000x900 / D1320x900
950-8002	D750x900 / D1000x900 / D1320x900
950-8003	D750x900 / D1000x900 / D1320x900
950-8004	D750x900 / D1000x900 / D1320x900

Part #	Fits Ditch Witch® Model
950-2750	JT920 / JT920L / JT921 / JT922
950-3000	JT1220 Mach1 / JT1720 / JT1720 Mach1 / JT2020 Mach1
950-3500	JT25 / JT2720 / 2720M1 / AT2720 / JT3020M1 / AT3020 / JT4020 / JT4020M1 / AT4020
950-4500	JT7020 Mach1 / JT8020 Mach1 / JT100 / AT100
950-5000	JT100 / AT100

Part #	Fits American Auger® Model
950-4500	DD-6
950-5000	DD-10 / DD-220 / DD-220T
950-6500	DD-440 / DD-440T
950-8000	DD-625 / DD-1100 / DD-1100RS
950-8001	DD-625 / DD-1100 / DD-1100RS
950-8002	DD-625 / DD-1100 / DD-1100RS
950-8003	DD-625 / DD-1100 / DD-1100RS
950-8004	DD-625 / DD-1100 / DD-1100RS



TAKING OUR GAME TO THE NEXT LEVEL

DRILLING TO REAMING

Same Radius hot shot tools in a new application.

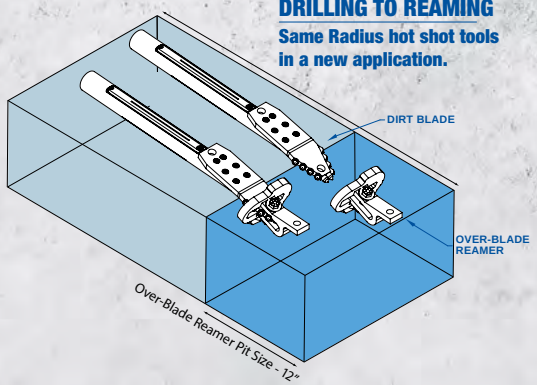

Quick Change, Over-Blade.

Just like the **"Over-Bit Reamer"** our Over-Blade Reamer reduces the time and space required to begin the reaming process. Place the Over-Blade over the blade and tighten the bolt reducing the need to remove the pilot tools.

RADIUS® OVER-BLADE REAMER

The Over-Blade Reamer is your solution to get your product into small easements faster. Designed to attach directly on to your pilot blade and allow it back ream a hole of 6" or 8" without removing and reattaching different tools. Quick, easy solution to cut your time down, make money and keep your customers happy.

Part #	Description
956-0657	6" Radius Over-Blade Reamer Fits Over Most 5" Blades
956-0658	8" Radius Over-Blade Reamers Fits Over Most 6" Blades



Call or Text 855.471.2771



RADIUS® OVER-BIT REAMER

The Radius Overbit Reamer eliminates completely the need to remove pilot tools to attach a reamer. Designed for fiber and small bore contractors, the Overbit Reamer simply attaches over the pilot bit and secures with one bolt. It offers the simplicity your crews have been looking for and perfect in small exit pits—no collars, no wrenches or tongs. With the pilot tool attached the sonde can be used to locate through tight easements or intersects. Designed exclusively for 2700 and 3500 series Radius rock bit.



Part #	Description
956-0496	6" Radius Over-Bit Reamer Fits 2700 Series
956-0497	8" Radius Over-Bit Reamer Fits 3000 Series
SPL-0020	2750 Series Rock Bit & 6" Over-Bit Bundle

ROCK TOOLS
CONTINUED

TRICONE BITS

Radius HDD offers the “Focus” tricone bit line in both Milltooth and TCI cutting structures, delivering quality to contractors at the right price. Bits feature sealed bearings, cone nose protection, carbide insert gauge protection and carbide nozzles to protect from abrasive drilling and assist fluid control.



TCI TRICONE BITS
10,000 – 28,000 PSI

- Shale
- Limestone
- Granite



MILLTOOTH TRICONE BITS
< 10,000 PSI

- Sand
- Clay Stone
- Soft Shale

SEALED BEARING TRICONES

Part #	Size	Style	IADC	Thread Connection
950-1023	5.5" Tricone	TCI	527 (8000-28000 PSI Rock)	2.875" Reg Pin
950-1009	5.5" Tricone	Mill Tooth	117 (0-5000 PSI Rock)	2.875" Reg Pin
950-1044	5.875" Tricone	TCI	527 (8000-28000 PSI Rock)	3.5" Reg Pin
950-1008	6" Tricone	TCI	527 (8000-28000 PSI Rock)	2.875" Reg Pin
950-1010	6" Tricone	Mill Tooth	117 (0-5000 PSI Rock)	3.5" Reg Pin
950-1011	6.5" Tricone	TCI	527 (8000-28000 PSI Rock)	3.5" Reg Pin
950-1018	6.75" Tricone	Mill Tooth	117 (0-5000 PSI Rock)	3.5" Reg Pin
950-1012	6.75" Tricone	TCI	527 (8000-28000 PSI Rock)	3.5" Reg Pin
950-1074	5.5" Tricone	TCI	600	2.875" API Reg Pin
950-1080	5.5" Tricone	TCI	525	2.875" API Reg Pin
950-1059	6.25" Tricone	Mill Tooth	117 (0-5000 PSI Rock)	3.5" API Reg Pin
950-1083	6.25" Tricone	TCI	627	3.5" API Reg Pin
950-1069	6.25" Tricone	TCI	500	3.5" API Reg Pin
950-1073	6.25" Tricone	TCI	537	3.5" API Reg Pin
950-1067	6.25" Tricone	TCI	637	3.5" API Reg Pin
950-1017	6.25" Tricone	Mill Tooth	117 (0-5000 PSI Rock)	3.5" API Reg Pin
950-1026	5.5" Tricone	TCI	637	2.875" API Reg Pin

OPEN BEARING TRICONES

Part #	Size	Style	IADC	Thread Connection
950-1035	5.5" Tricone	Mill Tooth	322 (7500-14000 PSI Rock)	2.875" Reg Pin
950-1054	6.75" Tricone	TCI	522 (8000-28000 PSI Rock)	3.5" Reg Pin

PDC BITS

DID YOU KNOW? WE REPAIR PDC BITS!

The Radius PDC bits built with American steel and American made cutters for a peace of mind quality investment. We kept horizontal use in mind, providing balanced machining, elongated flutes, side gauge protection where it matters and cutter placement to accelerate drilling softer solid formation such as compressed sand, mudstone, claystone and limestone.

PDC BITS

Part #	Size	Blade Count	Thread Connection
950-1045	5.125" PDC	5-Blade	2.875" Reg Pin
950-1039	7.875" PDC	5-Blade	4.5" Reg Pin
950-1075	5.5" PDC	5-Blade	2.875" Reg Pin
950-1076	6.5" PDC	5-Blade	3.5" Reg Pin
956-0627	8" PDC	5-Blade	2.875" Reg Box x Box
950-1063	5.625" PDC	3-Blade	2.875" API Reg Pin



PDC Bits

> ***THEY ARE THE BEST IN THE BUSINESS,*** *THEY HAVE AWESOME CUSTOMER SUPPORT AND ARE FABRICATION MASTERS AND WILL DO WHAT IT TAKES TO GET YOUR JOB SITE MOVING.*
>
> BRAD BROWN

COBBLE BITS

The Radius cobble bit is designed to maximize productivity and durability in cobble and loose rock conditions. With its carbide face and scooped profile, this pilot offers stable cutting action, but also provides improved navigational characteristics. Cobble is never easy – this bit changes the game.

Part #	Description	Thread Connection	Cut	Rig Class
950-1205	12" Cobble Bit	6-5/8" Full Hole Box	12"	250K–U
950-3005	3" Cobble Bit	2" IF Pin	4"	16–24K
950-3505	3500 Series Cobble Bit	2.375" Reg Pin	5"	24–40K
950-4505	4500 Series Cobble Bit	2.875" Reg Pin	6"	40–100K
950-5005	5000 Series Cobble Bit	3.5" Reg Pin	7"	100–250K
950-6505	6500 Series Cobble Bit	4.5" Reg Pin	6"	250–600K

RIG COMPATABILITY

Vermeer® Ditch Witch® American Auger®

Part #	Fits Vermeer® Model
950-3500	D2440A / D24x40 series II / D33x44 / D36x50 / D35x50 Series II
950-4500	D50x100 / D60x90 / D80x100 Series II / D100x120 / D100x120 Series II / D100x140
950-5000	D100x120 / D100x120 Series II / D100x140

Part #	Fits Ditch Witch® Model
950-3500	JT25 / JT2720 / JT2720 M1 / AT2720 / JT3020M1 AT3020 / JT4020 / JT4020M1 / AT4020
950-4500	JT7020M1 / JT8020M1 / JT100 / AT100
950-5000	JT100 / AT100

Part #	Fits American Auger® Model
950-4500	DD-6
950-5000	DD-10/ DD-220 / DD-220T
950-6505	D330x500 / D500x500
950-6505	DD-440 / DD-440T



SINGLE ROLLER CONE BITS

Our proprietary design delivers better steering than any competitive bit, while a carbide-covered steering plate and additional carbide on the face delivers better grinding capabilities for your solid rock jobs.

Part #	Description	Thread Connection	Cut	Rig Class
950-3001	3000 Single Roller Cone Bit	2" IF Pin	5"	14-24K
950-3501	3500 Single Roller Cone Bit	2.375" Reg Pin	6"	24-40K
950-3503	3500 Series Single Roller Cone Bit	2.375" API Reg Pin with Rect Pad	6"	24-40k
950-4503	4500 Series Single Roller Cone Bit	2.875" API Reg Pin with Rect Pad	7"	40-100k
950-4501	4500 Single Roller Cone Bit	2.875" Reg Pin	7"	40-100K
950-5003	5000 Single Roller Cone Bit	3.5" Reg Pin	8"	100-250K

ROCK TOOLS
CONTINUED

RIG COMPATABILITY

Vermeer® Ditch Witch® American Auger®

Part #	Fits Vermeer® Model
950-3000	D16x20 / D16x20 Series II / D18x22 / D20x22 / D20x22 Series II / D20x22 FX / D24x26
950-3500	D24x40A / D24x40 Series II / D33x44 / D36x50 / D36x50 Series II
950-4500	D50x100A / D60x90 / D80x100 Series II / D100x120 / D100x120 Series II / D100x140
950-5000	D100x120 / D100x120 Series II / D100x140

Part #	Fits Ditch Witch® Model
950-3000	JT1220 Mach1 / JT1720 / JT1720 Mach1 / JT2020 Mach1
950-3500	JT25 / JT2720 / 2720M1 / AT2720 / JT3020M1 / AT3020 / JT4020 / JT4020M1
950-4500	JT7020 Mach1 / JT8020 Mach1 / JT100 / AT100

Part #	Fits American Auger® Model
950-4500	DD-6 / DD-10 / DD-220 / DD-220T



THREAD-ON BLADE ADAPTERS

Make your rock housing even more versatile with our thread-on dirt blade adapter. The replaceable jetting nozzle minimizes clogging and maximizes jetting pressure.

Part #	Description	Thread Connection
952-0092	Ditch Witch 5 Bolt (12 mm)	2" IF Pin - 2.75" dia
952-0085	Ditch Witch 5 Bolt (12 mm)	2" IF Pin - 3" dia
952-0086	Ditch Witch 5 Bolt (12 mm)	2.375" Reg Pin
952-0087	Ditch Witch 6 Bolt (16 mm)	2.375" Reg Pin
952-0088	Ditch Witch 6 Bolt (20 mm)	2.875" Reg Pin
952-0096	Ditch Witch 6 Bolt (20 mm)	3.5" Reg Pin
952-0126	Ditch Witch 6 Bolt (20 mm)	4.5" Reg Pin
952-0093	Vermeer 6 Bolt (0.5"-13)	2" IF Pin - 2.75" dia
952-0082	Vermeer 6 Bolt (0.5"-13)	2" IF Pin - 3" dia
952-0083	Vermeer 6 Bolt (0.5"-13)	2.375" Reg Pin
952-0084	Vermeer 6 Bolt (0.625"-11)	2.875" Reg Pin
952-0089	Vermeer 6 Bolt (0.625"-11)	3.5" Reg Pin
952-0091	Vermeer 6 Bolt (0.625"-11)	4.5" Reg Pin
952-0137	Vermeer 6 Bolt (0.75"-10)	3.5" Reg Pin
952-0138	Vermeer 6 Bolt (0.75"-10)	4.5" Reg Pin





BITS & BLADES

TACKLE ANY CONDITION WITH A RADIUS BLADE.

Field-tested. *HDD Pro-proven.*

Our field-tested, HDD Pro-proven designs give you a downhole advantage in durability and performance.

JAGGER BLADES

FOR HARD ROCK, HARDENED COMPACT SOIL/GRAVEL.

VERMEER® COMPATIBLE JAGGER BLADES

Part #	Bolt Pattern	Width	Thickness
952-0099	6 Bolt (0.5"-13)	3.5"	0.625"
952-0017	6 Bolt (0.5"-13)	4"	0.75"
952-0018	6 Bolt (0.5"-13)	5"	0.75"
952-0105	6 Bolt (0.625"-11)	5"	1"
952-0039	6 Bolt (0.625"-11)	6"	1"
952-0019	6 Bolt (0.5"-13)	6.5"	0.75"
952-0020	6 Bolt (0.625"-11)	8"	1"
952-0104	6 Bolt (0.75"-10)	8"	1"
952-0146	6 Bolt (0.625"-11)	10"	1"
952-0148	6 Bolt (0.75"-10)	10"	1"

- Carbide teeth welded on cutting face for more durability and better cutting performance.
- Chunky carbide along wear edges provides protection to extend blade life.



DITCH WITCH® COMPATIBLE JAGGER BLADES

Part #	Bolt Pattern	Width	Thickness
952-0129	3 Bolt (12 mm)	3"	0.75"
952-0100	5 Bolt (12 mm)	3.5"	0.625"
952-0051	5 Bolt (12 mm)	4"	0.75"
952-0101	6 Bolt (16 mm)	4.5"	0.75"
952-0052	5 Bolt (12 mm)	5"	0.75"
952-0067	6 Bolt (16 mm)	5"	0.75"
952-0102	6 Bolt (20 mm)	5"	1"
952-0068	6 Bolt (20 mm)	6"	1"
952-0103	6 Bolt (20 mm)	8"	1"
952-0149	6 Bolt (20 mm)	10"	1"



BITS & BLADES CONTINUED ON NEXT PAGE

BITS & BLADES
CONTINUED

STEEP TAPER JAGGER BLADES

FOR HARD ROCK, HARDENED COMPACT SOIL/GRAVEL.

VERMEER® COMPATIBLE STEEP TAPER JAGGER BLADE

Part #	Bolt Pattern	Width	Thickness
952-0106	6 Bolt (0.5"-13)	3.5"	0.75"
952-0021	6 Bolt (0.5"-13)	4"	0.75"
952-0022	6 Bolt (0.5"-13)	5"	0.75"
952-0107	6 Bolt (0.625"-11)	5"	1"
952-0098	6 Bolt (0.625"-11)	6"	1"
952-0178	6 Bolt (0.75"-10)	6"	1"
952-0130	6 Bolt (0.625"-11)	8"	1"
952-0147	6 Bolt (0.75"-10)	7"	1"
952-0108	6 Bolt (0.75"-10)	8"	1"

- Designed for directional pushes with a leading center point for easier penetration and quicker steering.
- Carbide teeth welded on cutting face for more durability and better cutting performance.
- Chunky carbide protection along wear edges to extend blade life.
- Clipped rear corner design to minimize drag.

DITCH WITCH® COMPATIBLE STEEP TAPER JAGGER BLADE

Part #	Bolt Pattern	Width	Thickness
952-0053	5 Bolt (12 mm)	4"	0.75"
952-0109	6 Bolt (16 mm)	4"	0.75"
952-0069	6 Bolt (16 mm)	5"	0.75"
952-0110	6 Bolt (20 mm)	5"	1"
952-0145	5 Bolt (12 mm)	5"	0.75"
952-0094	6 Bolt (20 mm)	6"	1"
952-0111	6 Bolt (20 mm)	8"	1"



MONSTER BLADES

FOR HARD, ROCKY SOIL CONDITIONS SUCH AS CALICHE/SANDSTONE.

VERMEER® COMPATIBLE MONTER BLADE

Part #	Bolt Pattern	Width	Thickness
952-0023	6 Bolt (0.5"-13)	3.5"	0.75"
952-0024	6 Bolt (0.5"-13)	4"	0.75"
952-0025	6 Bolt (0.5"-13)	5"	0.75"
952-0040	6 Bolt (0.625"-11)	5"	1"
952-0041	6 Bolt (0.625"-11)	6"	1"
952-0131	6 Bolt (0.625"-11)	8"	1"
952-0115	6 Bolt (0.75"-10)	8"	1"

- Aggressive tooth placement with carbide points for superior fracturing and penetration in extreme conditions.
- Carbide-protected wear edges for long-lasting durability.

DITCH WITCH® COMPATIBLE MONTER BLADE

Part #	Bolt Pattern	Width	Thickness
952-0054	5 Bolt (12 mm)	3.5"	0.75"
952-0055	5 Bolt (12 mm)	4"	0.75"
952-0070	6 Bolt (16 mm)	4"	0.75"
952-0056	5 Bolt (12 mm)	5"	0.75"
952-0071	6 Bolt (16 mm)	5"	0.75"
952-0117	6 Bolt (20 mm)	6"	1"



180° BLADES

FOR ROCKY AND ABRASIVE SOIL CONDITIONS.

VERMEER® COMPATIBLE 180° BLADE

Part #	Bolt Pattern	Width	Thickness
952-0013	6 Bolt (0.5"-13)	3.5"	0.75"
952-0014	6 Bolt (0.5"-13)	4"	0.75"
952-0037	6 Bolt (0.5"-13)	4.5"	0.75"
952-0015	6 Bolt (0.5"-13)	5"	0.75"
952-0036	6 Bolt (0.625"-11)	5"	1"
952-0016	6 Bolt (0.5"-13)	6"	0.75"
952-0038	6 Bolt (0.625"-11)	6"	1"
952-0132	6 Bolt (0.625"-11)	8"	1"
952-0167	5 Bolt (3/8" -16)	3.5"	0.75"

- 180° cutting-edge design for smoother rotation and cutting performance.
- Carbide buttons for increased cutting action in tough conditions.

DITCH WITCH® COMPATIBLE 180° BLADE

Part #	Bolt Pattern	Width	Thickness
952-0048	5 Bolt (12 mm)	3.5"	0.75"
952-0049	5 Bolt (12 mm)	4"	0.75"
952-0063	6 Bolt (16 mm)	4"	0.75"
952-0050	5 Bolt (12 mm)	5"	0.75"
952-0064	6 Bolt (16 mm)	5"	0.75"
952-0065	6 Bolt (20 mm)	5"	1"
952-0114	6 Bolt (20 mm)	8"	1"



RUBBLE BLADES

FOR SAND AND SANDY LOAMS.

VERMEER® COMPATIBLE RUBBLE BLADE

Part #	Bolt Pattern	Width	Thickness
952-0168	5 Bolt (3/8"-16)	3.5"	0.75"
952-0169	5 Bolt (3/8"-16)	2.5"	0.5"
952-0033	6 Bolt (0.5"-13)	3.5"	0.75"
952-0034	6 Bolt (0.5"-13)	4"	0.75"
952-0035	6 Bolt (0.5"-13)	5"	0.75"
952-0047	6 Bolt (0.625"-11)	6"	1"
952-0140	6 Bolt (0.75"-10)	6"	1"
952-0119	6 Bolt (0.75"-10)	8"	1"
952-0133	6 Bolt (0.625"-11)	8"	1"
952-0139	6 Bolt (0.625"-11)	10"	1"
952-0141	6 Bolt (0.75"-10)	10"	1"
952-0142	6 Bolt (0.75"-10)	12"	1"
952-0061	5 Bolt (12 mm)	3"	0.75"
952-0062	5 Bolt (12 mm)	4"	0.75"
952-0078	6 Bolt (16 mm)	4"	0.75"
952-0079	6 Bolt (16 mm)	5"	0.75"
952-0080	6 Bolt (20 mm)	5"	1"
952-0081	6 Bolt (20 mm)	6"	1"
952-0120	6 Bolt (20 mm)	8"	1"

- An all-purpose design for soft, but abrasive, conditions.
- Rubble of carbide applied to cutting edge for greater penetration and longer blade life.



BITS & BLADES
CONTINUED

STEEP TAPER RUBBLE BLADES
FOR LOOSE COBBLE AND GRAVEL.

VERMEER® COMPATIBLE STEEP TAPER RUBBLE BLADE

Part #	Bolt Pattern	Width	Thickness
952-0026	6 Bolt (0.5"-13)	3.5"	0.75"
952-0027	6 Bolt (0.5"-13)	4"	0.75"
952-0028	6 Bolt (0.5"-13)	5"	0.75"
952-0029	6 Bolt (0.5"-13)	6"	0.75"

- Designed for directional pushes with a leading center point for easier penetration and quicker steering.
- Chunky carbide protection along wear edges to extend blade life.
- Clipped rear corner design to minimize drag.

DITCH WITCH® COMPATIBLE STEEP TAPER RUBBLE BLADE

Part #	Bolt Pattern	Width	Thickness
952-0127	3 Bolt (12 mm)	2.5"	0.75"
952-0057	5 Bolt (12 mm)	3"	0.75"
952-0058	5 Bolt (12 mm)	4"	0.75"
952-0072	6 Bolt (16 mm)	4"	0.75"
952-0095	6 Bolt (16 mm)	5"	0.75"
952-0073	6 Bolt (20 mm)	5"	1"



RAZOR BLADES
FOR CALICHE, COBBLE, GRAVEL, AND SOFTER SHALES.

VERMEER® COMPATIBLE RAZOR BLADE

Part #	Bolt Pattern	Width	Thickness
952-0174	6 Bolt (0.5"-13)	3.5"	0.75"
952-0175	6 Bolt (0.5"-13)	4"	0.75"
952-0176	6 Bolt (0.5"-13)	5"	0.75"

- Taper Design assists with Steering and penetration rate.
- Aggressive tooth placement with carbide points for superior fracturing and penetration in extreme conditions.
- Carbide-protected wear edges for long-lasting durability.

DITCH WITCH® COMPATIBLE RAZOR BLADE

Part #	Bolt Pattern	Width	Thickness
952-0170	5 Bolt (12 mm)	3.5"	0.75"
952-0171	5 Bolt (12 mm)	4"	0.75"
952-0172	6 Bolt (16 mm)	4"	0.75"
952-0173	6 Bolt (16 mm)	5"	0.75"
952-0177	5 Bolt (12 mm)	5"	0.75"



POWER POINTS

FOR GRAVEL, HARDPAN, AND LOOSE COBBLE.

VERMEER® COMPATIBLE POWER POINT

Part #	Bolt Pattern	Width	Thickness
952-0150	6 Bolt (0.5"-13)	3.5"	0.75"
952-0151	6 Bolt (0.5"-13)	4"	0.75"
952-0152	6 Bolt (0.5"-13)	4.5"	0.75"
952-0153	6 Bolt (0.5"-13)	5"	0.75"
952-0154	6 Bolt (0.625"-11)	6"	0.75"
952-0155	6 Bolt (0.5"-13)	6"	0.75"

- Taper design assists with steering and penetration rate in loose cobble and gravel conditions.
- Carbide buttons for increased cutting action in tough conditions.
- Carbide protection along edges for longer blade life.

DITCH WITCH® COMPATIBLE POWER POINT

Part #	Bolt Pattern	Width	Thickness
952-0156	5 Bolt (12 mm)	3.5"	0.75"
952-0157	5 Bolt (12 mm)	4"	0.75"
952-0158	6 Bolt (16 mm)	4"	0.75"
952-0159	6 Bolt (16 mm)	5"	0.75"
952-0160	6 Bolt (16 mm)	4.5"	0.75"
952-0161	6 Bolt (16 mm)	6"	0.75"



STEEP TIP POWER POINT BLADES

FOR LOOSE COBBLE AND GRAVEL.

VERMEER® COMPATIBLE STEEP TIP POWER POINT BLADE

Part #	Bolt Pattern	Width	Thickness
952-0179	6 Bolt (0.5"-13)	3.5"	0.75"
952-0180	6 Bolt (0.5"-13)	4"	0.75"
952-0181	6 Bolt (0.5"-13)	4.5"	0.75"
952-0182	6 Bolt (0.5"-13)	5"	0.75"

- Designed for directional pushes with a leading center point for easier penetration and quicker steering.
- Carbide buttons for increased cutting action in tough conditions.
- Carbide protection along edges for longer blade life.
- Clipped rear corner design to minimize drag.

DITCH WITCH® COMPATIBLE STEEP TIP POWER POINT BLADE

Part #	Bolt Pattern	Width	Thickness
952-0186	5 Bolt (12 mm)	3.5"	0.75"
952-0187	5 Bolt (12 mm)	4"	0.75"
952-0183	6 Bolt (16 mm)	4"	0.75"
952-0188	5 Bolt (12 mm)	4.5"	0.75"
952-0184	6 Bolt (16 mm)	4.5"	0.75"
952-0185	6 Bolt (16 mm)	5"	0.75"



BITS & BLADES
CONTINUED

ULTIMATE BITS

VERMEER® COMPATIBLE ULTIMATE BIT

Part #	Bolt Pattern	Width	Thickness
952-0195	6 Bolt (0.5"-13)	4"	0.75"
952-0196	6 Bolt (0.5"-13)	5"	0.75"

- Carbide cutters line the head of this bit making is ideal for tough conditions.
- Hardsurfacing added to the length of the Ultimate Bit helps for high cutting power.
- Great bit for compact soils and gravel.

DITCH WITCH® COMPATIBLE ULTIMATE BIT

Part #	Bolt Pattern	Width	Thickness
952-0192	5 Bolt (12 mm)	4"	0.75"
952-0193	5 Bolt (12 mm)	5"	0.75"
952-0194	6 Bolt (16 mm)	4"	0.75"
952-0197	6 Bolt (16 mm)	5"	0.75"



FREEDOM BLADES

VERMEER® COMPATIBLE FREEDOM BLADE

Part #	Bolt Pattern	Width	Thickness
952-0201	1/2-13 SHCS	5.5"	
952-0202	1/2-13 SHCS	5"	
952-0203	5/8-11 SHCS	6.5"	



DITCH WITCH® COMPATIBLE FREEDOM BLADE

Part #	Bolt Pattern	Width	Thickness
952-0204	5 Bolt (12 mm)		0.75"
952-0205	5 Bolt (16 mm) SHCS		0.75"
952-0206	6 Bolt (16mm) SHCS	5.5"	0.75"

> *RADIUS IS AN **INDUSTRY LEADER** IN THE HDD COMMUNITY WITH INCREDIBLE CUSTOMER SERVICE AND PROFESSIONALLY TRAINED SALESMAN AND TECHNICIANS. **THEIR PRICING AND TURNAROUND IS BY FAR THE BEST IN THE BUSINESS.***
>
> JOE HREHA JR.

REAMERS

GET THE JOB DONE RIGHT WITH RADIUS.

BARREL REAMERS

Designed with thick-walled structural steel and internally gusseted for unmatched strength and durability.

- Designed to operate as an effective compaction reamer in softer conditions
- An ideal centralizer for larger diameter projects
- Available in chambered and non-chambered designed for varying projects and weight preference.

Part #	Cutting Size	Connection	Shaft Diameter
956-0415	8"	2.375" Reg Box x Box	3.5"
956-0416	10"	2.375" Reg Box x Box	3.5"
956-0417	12"	2.375" Reg Box x Box	3.5"
956-0385	12"	2.875" Reg Box x Box	4.25"
956-0386	16"	2.875" Reg Box x Box	4.25"
956-0387	18"	2.875" Reg Box x Box	4.25"
956-0388	20"	2.875" Reg Box x Box	4.25"
956-0180	24"	2.875" Reg Box x Box	4.25"
956-0393	24"	3.5" Reg Box x Box	5"
956-0395	36"	3.5" Reg Box x Box	5"



FOR A ROUND HOLE IN SOFTER SHALES.

HOLE OPENERS

Radius designs and builds some of the most durable hole openers available.
Engineered to maximize productivity in the most difficult solid and fractured rock conditions.

- Hole openers are built to your needs with our exacting standards
- 16" to 48" hole openers are commonly stocked to for same day shipping when time is critical
- Manufactured with new or rerun cones offers economic options
- Field proven design and performance

Part #	Cutting Size	Qty. & Size of Cones	Connection / Shaft Diameter
956-0372	10"	4 - 6.25" TCI Cones	2.375" Reg Box x Box / 3.5"
956-0374	14"	4 - 8.75" TCI Cones	2.375" Reg Box x Box / 3.5"
956-0375	16"	5 - 8.75" TCI Cones	2.375" Reg Box x Box / 3.5"
956-0420	18"	6 - 8.75" TCI Cones	2.375" Reg Box x Box / 3.5"
956-0421	12"	4 - 7.875" TCI Cones	2.875" Reg Box x Box / 4.25"
956-0377	16"	5 - 8.75" TCI Cones	2.875" Reg Box x Box / 4.25"
956-0378	18"	6 - 8.75" TCI Cones	2.875" Reg Box x Box / 4.25"
956-0381	16"	5 - 8.75" TCI Cones	3.5" Reg Box x Box / 5"
956-0382	18"	6 - 8.75" TCI Cones	3.5" Reg Box x Box / 5"
956-0384	24"	5 - 12.25" TCI Cones	3.5" Reg Box x Box / 5"
956-0618	6.5"	3 - 5.5" Cones (NC)	2.375" Reg Box x Box
956-0619	8"	4 - 6" TCI Cones (NC)	2.375" Reg Box x Box
956-0617	10"	5 - 6.6" TCI Cones (RC)	2.375" Reg Box x Box
956-0608	10"	5 - 6.5" TCI Cones (NC)	2.875" Reg Box x Box
956-0643	12"	5 - 5.875" TCI Cones (NC)	2.375" Reg Box x Box
956-0647	12"	5 - 7.875" TCI Cones (NC)	2.875" Reg Box x Box
956-0646	14"	5 - 8.75" TCI Cones (NC)	2.87" Reg Box x Box



FOR SOLID AND FRACTURED ROCK.

REAMERS
CONTINUED

FLY CUTTER REAMERS

- Maximum number of cutters available on the market today.
- Carbide-tipped teeth for better cutting performance.
- Rear-facing teeth for easy push-backs.
- Open, tapered design reduces torque load needed and mixes spoils with drilling mud.

Part #	Cutting Size	Connection	Shaft Diameter
956-0081	8"	2" IF Box x Box	2.75"
956-0084	14"	2" IF Box x Box	2.75"
956-0085	16"	2" IF Box x Box	2.75"
956-0086	18"	2" IF Box x Box	2.75"
956-0087	8"	2.375" Reg Box x Box	3.5"
956-0088	10"	2.375" Reg Box x Box	3.5"
956-0089	12"	2.375" Reg Box x Box	3.5"
956-0090	14"	2.375" Reg Box x Box	3.5"
956-0091	16"	2.375" Reg Box x Box	3.5"
956-0092	18"	2.375" Reg Box x Box	3.5"
956-0093	20"	2.375" Reg Box x Box	3.5"
956-0094	24"	2.375" Reg Box x Box	3.5"
956-0096	32"	2.375" Reg Box x Box	3.5"
956-0172	30"	2.375" Reg Box x Box	3.50"
956-0098	10"	2.875" Reg Box to Box	4.25"
956-0099	12"	2.875" Reg Box to Box	4.25"
956-0100	14"	2.875" Reg Box to Box	4.25"
956-0101	16"	2.875" Reg Box to Box	4.25"
956-0102	18"	2.875" Reg Box to Box	4.25"
956-0103	20"	2.875" Reg Box to Box	4.25"
956-0104	24"	2.875" Reg Box to Box	4.25"
956-0105	28"	2.875" Reg Box to Box	4.25"
956-0106	30"	2.875" Reg Box to Box	4.25"
956-0173	32"	2.875" Reg Box to Box	4.25"



FOR SAND WITH COBBLES, SANDSTONE AND HARDPAN.

STACK PLATE REAMERS

- Thickest plates on the market (1½" steel) with interior welds to minimize wear. The competition welds their plates on the outside where they are exposed to damaging conditions.
- Maximum number of cutters available on the market today, precisely placed for an extremely smooth cutting action.
- Stacked plates are tapered and rotated slightly, creating spiraled flutes for evacuating spoils.
- Wear edges reinforced with hardfacing for longer life.

Part #	Cutting Size	Connection	Shaft Diameter
956-0444	6"	2.375" Reg Box x Box	3.25"
956-0011	8"	2.375" API Reg Box x Box	3.5"
956-0012	10"	2.375" API Reg Box x Box	3.5"
956-0013	12"	2.375" API Reg Box x Box	3.5"
956-0014	14"	2.375" API Reg Box x Box	3.5"
956-0015	16"	2.375" API Reg Box x Box	3.5"
956-0016	18"	2.375" API Reg Box x Box	3.5"
956-0017	20"	2.375" API Reg Box x Box	3.5"
956-0018	10"	2.875" Reg Box x Box	4.25"



FOR EXTREME CONDITIONS SUCH AS HARD ROCK, CHUNK ROCK AND COBBLE

STACK PLATE REAMERS (CONTINUED)

Part #	Cutting Size	Connection	Shaft Diameter
956-0019	12"	2.875" Reg Box x Box	4.25"
956-0020	14"	2.875" Reg Box x Box	4.25"
956-0021	16"	2.875" Reg Box x Box	4.25"
956-0022	18"	2.875" Reg Box x Box	4.25"
956-0023	20"	2.875" Reg Box x Box	4.25"
956-0024	24"	2.875" Reg Box x Box	4.25"
956-0026	28"	2.875" Reg Box x Box	4.25"
956-0028	32"	2.875" Reg Box x Box	4.25"

PADDLE REAMERS

- Paddle design provides both aggressive cutting and efficient fluid mixing/pumping action.
- Low-resistance profile requires less horsepower for rotation in a variety of soil conditions.
- Reduced surface area minimizes clay and cuttings build up.

Part #	Cutting Size	Connection	Shaft Diameter
956-0048	6"	2" IF Box x Box	2.75"
956-0049	8"	2" IF Box x Box	2.75"
956-0050	10"	2" IF Box x Box	2.75"
956-0051	12"	2" IF Box x Box	2.75"
956-0054	18"	2" IF Box x Box	2.75"
956-0057	6"	2.375" Reg Box x Box	3.5"
956-0058	8"	2.375" Reg Box x Box	3.5"
956-0059	10"	2.375" Reg Box x Box	3.5"
956-0060	12"	2.375" Reg Box x Box	3.5"
956-0061	14"	2.375" Reg Box x Box	3.5"
956-0062	16"	2.375" Reg Box x Box	3.5"
956-0063	18"	2.375" Reg Box x Box	3.5"
956-0064	20"	2.375" Reg Box x Box	3.5"
956-0065	24"	2.375" Reg Box x Box	3.5"
956-0067	10"	2.875" Reg Box to Box	4.25"
956-0068	12"	2.875" Reg Box to Box	4.25"
956-0069	14"	2.875" Reg Box to Box	4.25"
956-0070	16"	2.875" Reg Box to Box	4.25"
956-0071	18"	2.875" Reg Box to Box	4.25"
956-0072	20"	2.875" Reg Box to Box	4.25"
956-0074	24"	2.875" Reg Box to Box	4.25"
956-0076	30"	2.875" Reg Box to Box	4.25"



FOR CLAY, DIRT AND STICKY SOILS.

RADIUS® TURBO REAMER

Part #	Cutting Size	Connection
956-0419	8"	2.375" Reg Box x Box
956-0567	10"	2.375" Reg Box x Box
956-0431	12"	2.375" Reg Box x Box
956-0459	16"	2.375" Reg Box x Box



FOR CALICHE, SAND, CLAY, & OTHER UNSTABLE SOILS.

REAMERS
CONTINUED

RADIUS® OVER-BIT REAMER

The Radius Overbit Reamer eliminates completely the need to remove pilot tools to attach a reamer. Designed for fiber and small bore contractors, the Overbit Reamer simply attaches over the pilot bit and secures with one bolt. It offers the simplicity your crews have been looking for and perfect in small exit pits—no collars, no wrenches or tongs. With the pilot tool attached the sonde can be used to locate through tight easements or intersects. Designed exclusively for 2700 and 3500 series Radius rock bit.

Part #	Description
956-0496	6" Radius Over-Bit Reamer Fits 2700 Series
956-0497	8" Radius Over-Bit Reamer Fits 3000 Series
SPL-0020	2750 Series Rock Bit & 6" Over-Bit Bundle



CUSTOM REAMERS & REPAIRS

SEE PAGE 49 FOR MORE INFO

THE RADIUS OVERBIT REAMER ELIMINATES COMPLETELY THE NEED TO REMOVE PILOT TOOLS TO ATTACH A REAMER.

COMPACT FLUTED REAMERS

- Deep-fluted design effectively and efficiently directs slurry flow past reamer and out of the hole.
- Built-in swivel for quick and reliable pullback.
- Carbide inserts strengthen teeth for better cutting performance.
- Precision-positioned fluid ports for efficient mixing and lubrication.

Part #	Cutting Size	Connection
956-0001	4.5"	2" IF Box x 12K Swivel
956-0003	6.5" (Conical)	2" IF Box x 12KSwivel
956-0002	6.5"	2" IF Box x 12K Swivel
956-0004	8"	2.375" Reg Box x 20K Swivel
956-0005	8" (Conical)	2.375" Reg Box x 20K Swivel
956-0611	10" (Conical)	2.375" Reg Box x 30K Swivel
956-0010	12"	2.375" Reg Box x 30K Swivel
956-0009	12" (Conical)	2.375" Reg Box x 30K Swivel
956-0008	4.5" (Conical)	2" IF Box x 12K Swivel
956-0588	6.5"	2.375" Reg Box x 20K Swivel
956-0656	6.5" (Conical)	2.375" Reg Box x 20K Swivel
956-0585	8"	2" IF Box x 20K Swivel
956-0575	8"	2.875" Reg Box x 20K Swivel
956-0566	10"	2.375" Reg Box x 20K Swivel
956-0563	14"	2.375" Reg Box x 40K Swivel
956-0507	16"	2.375" Reg Box x 30K Swivel
956-0571	18"	2.375" Reg Box x 30K Swivel
956-0577	18"	2.875" Reg Box x 40K Swivel
956-0581	20"	3.5" IF Box x 100K Swivel
956-0582	22"	3.5" IF Box x 100K Swivel
956-0583	24"	3.5" IF Box x 100K Swivel
956-0584	26"	3.5" IF Box x 100K Swivel



FOR MEDIUM TO TOUGH SOIL CONDITIONS INCLUDING HARD SOIL AND CHUNK ROCK

SWIVELS

SUPER STRONG AND ALWAYS IN STOCK.

Strong. *Radius strong.*

Radius offers some of the leading HDD swivels on the market today with a unique design that's one of the strongest available. Three bearings and a larger shaft built with tool steel construction, eliminates the fold-over you can get on other swivels. A smooth outside ensure a no-snag pull back.

DCD & CONDUX SWIVELS

Radius is proud to offer DCD swivels as part of our professional line of HDD tools. Available in a variety of sizes and connections, Radius has a huge selection of swivel and pulling products. A 5:1 working load limit on Deluxe swivels offers confidence and reliability, while Dublite swivels are a dependable and more economical choice. Either way, you can count on DCD swivels to get you back.

CONDUX® CLEVIS X CLEVIS VALUE SWIVELS

Part #	Description	Clevis ID	Working Load Limit
954-0044	4.25 Ton, 1.625" OD	5/8"	3 to 1
954-0045	5 Ton, 2" OD	3/4"	3 to 1
954-0047	10 Ton, 2.5" OD	1"	3 to 1
954-0048	15 Ton, 3" OD	1-5/16"	3 to 1



CONDUX® DELUX SWIVEL

Part #	Description	Clevis ID	Working Load Limit
954-0035	4.25 Ton, 1.625" OD	5/8"	3 to 1
954-0036	5 Ton, 2" OD	3/4"	3 to 1
954-0037	10 Ton, 2.5" OD	1"	3 to 1
954-0038	15 Ton, 3" OD	1-5/16"	3 to 1
954-0039	20 Ton, 4" OD	1-5/8"	3 to 1
954-0040	30 Ton, 4.5" OD	1-3/4"	3 to 1
954-0041	45 Ton, 5.75" OD	2"	3 to 1



DCD CLEVIS TO CLEVIS DUBLITE SWIVELS

Part #	Description	Clevis ID	Working Load Limit
954-0550	4.25 Ton, 2" OD	3/4"	3 to 1
954-0551	5 Ton, 2.25" OD	7/8"	3 to 1
954-0552	10 Ton, 2.5" OD	1"	3 to 1
954-0553	15 Ton, 3" OD	1-5/16"	3 to 1
954-0792	20 Ton, 4.75" OD	1-3/4"	3 to 1
954-0793	30 Ton, 5.75" OD	1-3/4"	3 to 1
954-0794	45 Ton, 6" OD	1-3/4"	3 to 1



SWIVELS
CONTINUED

DCD CLEVIS TO CLEVIS DUB SWIVELS

Part #	Description	Clevis ID	Working Load Limit
954-0690	5 Ton, 3.125" OD	1-1/4"	5 to 1
954-0691	10 Ton, 3.75" OD	1-1/2"	5 to 1
954-0692	15 Ton, 4.75" OD	1-3/4"	5 to 1
954-0693	20 Ton, 5.75" OD	1-3/4"	5 to 1
954-0694	30 Ton, 6" OD	1-3/4"	5 to 1
954-0695	40 Ton, 6.5" OD	2-1/8"	5 to 1
954-0560	60 Ton, 7.5" OD	2-3/4"	5 to 1



DCD CLEVIS TO IF DUB SWIVELS

Part #	Description	Clevis ID	Working Load Limit
954-0026	15 Ton, 2-3/8" IF Box, 4-3/4" OD	1-3/4"	5 to 1
954-0027	20 Ton, 2-3/8" IF Box, 5-3/4" OD	1-3/4"	5 to 1
954-0029	30 Ton, 2-7/8" IF Box, 6" OD	1-3/4"	5 to 1
954-0030	30 Ton, 3-1/2" IF Box, 6" OD	1-3/4"	5 to 1
954-0031	40 Ton, 3-1/2" IF Box, 6.5" OD	2-1/8"	5 to 1
954-0033	60 Ton, 4-1/2" IF Box, 7.5" OD	2-3/4"	5 to 1
954-0034	80 Ton, 4-1/2" IF Box, 9" OD	3-1/4"	5 to 1



FLANGE SWIVELS

Made in the USA from high-strength alloy steel and high-quality precision bearings, our flange swivels are specifically designed to withstand the rigors of directional boring. Each swivel is dynamically tested at the rated load with full pull and rotation for 100 hours. Radius flange swivels also feature convenient side access to grease zerk so you can grease the bearing without disassembly.

Part #	Description
954-0052	10K x 4.5" & 6" Ditch Witch® Compatible Fluted Reamer Swivel
954-0053	20K x 8" Ditch Witch® Compatible Fluted Reamer Swivel
954-0054	30K x 10" & 12" Ditch Witch® Compatible Fluted Reamer Swivel
954-0826	40K Ditch Witch® Compatible Flange Swivel
954-0863	15 Ton Dublite Flange Swivel
954-0871	30 Ton Dub Flange Swivel
954-1075	10 Ton Bolt-On Swivel (20K)
954-1108	15 Ton Bolt-On Swivel (30K)



OTHER SWIVELS

Part #	Description	Clevis ID
954-1060	10 Ton Dublite Swivel, Clevis x 2.375" Reg Pin	3.25"
954-0964	11 Ton Swivel Hook w/ Latch	1-3/4"

PARTS & ACCESSORIES

EVERYTHING YOU NEED. ALL IN ONE PLACE.

At Radius, our job is to make your job easier.

That means, not only carrying the best HDD tools available, it means putting just about anything an HDD pro needs right at your fingertips. Batteries to bolts, hard hats to housing doors, ponchos to pullers, and even caution tape to clevis pins and rod wipers. Anything you need, contact Radius HDD.

CLOCKING ASSEMBLY

Part #	Assembly Type	Size	Fits Model
954-0015	DCI Sonde Clocking Assembly	All R-SH Except 2-3/4" & 3"	3000 / 3500 / 4500 / 5000 / 6500
954-0361	DCI Clocking Assembly	3" Radius Housings	3000
954-0018	Subsite 86BV2 Clocking Assembly	3"=6" R-Housings (Flat Beacon)	3500 / 4500 / 5000 / 6500
954-0358	2.75" DCI Clocking Assembly		2750
954-0014	Subsite 86B Clocking Assembly	All R-SH Except 2-3/4"	3000 / 3500 / 4500 / 5000 / 6500
954-0377	Subsite BV2 Sonde Clocking Kit	2.75" Subsite Housing Only	
954-0019	Subsite 86B Clocking Assembly	2.75 R-Housing	
954-0016	Radio Detect Clocking Assembly	All R-SH except 2-3/4"	

PULLERS & PULLING ACCESSORIES

Whatever your pipe type or size, Radius has the pullers and pulling accessories you need.



4" Sleeved Puller



1.25" Carrot Puller



2" Expandable Puller



Dub Wise Puller

SLEEVED

Part #	Description
954-0113	1.25" Duct
954-0114	1.5" Duct
954-0115	2" Duct
954-0116	2.5" Duct
954-0117	3" Duct
954-0118	4" Duct
954-0119	5" Duct
954-0120	6" Duct

CARROT WITH EYE

Part #	Description
954-0133	0.5" to 1" Duct
954-0134	1" Duct
954-0135	1" to 1.25" Duct
954-0136	1.25" Duct
954-0137	1.25" to 1.5" Duct
954-0138	1.5" Duct
954-0139	2" Duct
954-1258	2.5" Duct

EXPANDABLE DUCT

Part #	Description
954-0123	1" Duct
954-0124	1.25" Duct
954-0125	1.5" Duct
954-0126	2" Duct
954-0127	2.5" Duct
954-0128	3" Duct
954-0129	4" Duct
954-0130	5" Duct
954-0131	6" Duct
954-0132	8" Duct
954-0276	10" Duct
954-0277	12" Duct

OTHER

Part #	Description
954-0503	Sleeveless Duct Puller, 2" Duct
954-0504	Dub Wise Puller (Sleeved), 1.5" Duct
954-0505	Dub Wise Puller (Sleeved), 2" Duct

PARTS & ACCESSORIES
CONTINUED

PULLING HEAD

Part #	Description
954-0625	HDPE 12"
954-1211	HDPE 18"
954-1209	HDPE 8"
954-1210	HDPE 10"
954-1212	HDPE 4"
954-1208	HDPE 6"

MESH PULLING GRIPS

Part #	Description	Length	Capacity
954-0140	Stnd Ditch Witch® Compatible Mesh Grip, 0.25"–0.5" Duct	18" OAL	1,700 lbs
954-0142	Stnd Ditch Witch® Compatible Mesh Grip, 0.5"–0.75" Duct	18" OAL	2,000 lbs
954-0143	Stnd Ditch Witch® Compatible Mesh Grip, 0.75"–1.25" Duct	18" OAL	2,000 lbs
954-0145	Stnd Wire Mesh Grip, 1.25"–2" Duct	26" OAL	2,500 lbs
954-0146	Stnd Wire Mesh Grip, 2"–2.75" Duct	32" OAL	3,500 lbs
954-0147	HD Wire Mesh Grip, 0.5"–0.75" Duct	24" OAL	2,600 lbs
954-0148	HD Wire Mesh Grip, 0.75"–1.25" Duct	24" OAL	3,500 lbs
954-0149	HD Wire Mesh Grip, 1.25"–2" Duct	32" OAL	3,500 lbs
954-0150	HD Wire Mesh Grip, 2"–2.75" Duct	38" OAL	4,500 lbs
954-0152	HD Wire Mesh Grip, 2.75"–3.5" Duct	38" OAL	4,500 lbs
954-0153	HD Wire Mesh Grip, 3.5"–4.25" Duct	46" OAL	5,500 lbs
954-0154	HD Wire Mesh Grip, 4.25"–4.875" Duct	52" OAL	6,500 lbs



Pulling Grip

POLYESTER PULLING TAPE

Part #	Description
954-0345	0.375"–6,500' Length – 1,130 lbs
954-0346	0.625"–3,000' Length – 1,800 lbs
954-0347	0.75"–5,000' Length – 2,500 lbs



Pulling Tape

PULLING SHACKLES

Part #	Product	Style	Work Load Limit
954-0802	0.375"	Screw Pin	2,000 lbs
954-0845	0.4375"	Screw Pin	3,000 lbs
954-0107	0.5"	Screw Pin	6,600 lbs
954-0108	0.625"	Screw Pin	6,500 lbs
954-0109	0.75"	Screw Pin	14,000 lbs
954-0110	0.875"	Screw Pin	13,000 lbs
954-0111	1"	Screw Pin	17,000 lbs
954-1044	1.25"	Screw Pin	24,000 lbs
954-0112	1.375"	Screw Pin	27,000 lbs
954-0622	1.5"	Screw Pin	34,000 lbs
954-0624	2"	Screw Pin	70,000 lbs
954-1044	1.25"	Screw Pin	24,000 lbs



Pulling Shackles

ROD WIPERS, VICE JAWS & INSERTS

Get a grip with tough Radius vice jaws, and keep your drill rods clean with our affordable rod wipers.

VERMEER® OEM VICE JAWS

Part #	Fits Model	Replacement Ct.
954-0080	D7x11 / D10x15 Stationary	2
954-0081	D7x11 / D10x15 Cylinder	2
954-0082	D16x20 Stationary	2
954-0083	D16x20 Cylinder	2
954-0366	D20x22 Cylinder	2
954-0367	D20x22 Stationary	2
954-0965	D23x30 Cylinder	2
954-0966	D23x30 Stationary	2
954-0084	D24x40 Stationary	4
954-0085	D33x44 / D36x50 Stationary (FS650)	4
954-0088	D36x50 / 40x55 Stationary (FS700)	4
954-0093	D50x100 / 80x100 Cylinder	4
954-0888	D36X50DR Series II	4
954-0887	S36X50DR Series II	2



OEM Vice Jaw

VERMEER® BLOCKS & INSERTS

Part #	Fits Model	Replacement Ct.
954-0086	D7x11 / D16x20 / 20x22 / 23x30 Stationary	2
954-0089	D7x11 / D16x20 / 20x22 / 23x30 Cylinder	2
954-0091	D7x11 / D9x13 Insert	4
954-0363	D23x30 / D24x40 Insert	4
954-0364	D24x40 / 33x44 / 36x50 / 40x55	4
954-0087	D33x44 / 36x50 Insert (FS650)	4
954-0362	D36x50 / 40x55 Insert (FS700)	4
954-0365	D60x90 / 50x100 / 80x100 / 100x120 Cylinder	4
954-0915	D100x120 / 100x140 Stationary (New Style)	4
954-0094	D60x90 / 50x100 / 80x100 / 100x120 / 100x140 Insert	8
954-0457	D60x90 / 50x100 / 80x100 / 100x120 / 100x140 Diamond Insert	8
954-0644	D50x100/80x100/DD110	



D7x11/D16x20
Block Hydraulic

DITCH WITCH® INSERT JAWS

Part #	Fits Model	Full Set Replacement Req.
954-0100	JT100 Mach1	8 Inserts
954-0099	JT4020 Mach1	8 Inserts
954-0098	JT2720 Mach1	8 Inserts
954-0097	JT3020 Mach1, 3020AT	4 Blocks
954-0096	JT922 Coarse Thread, JT2020 Mach1, JT1220 Mach1	4 Blocks
954-0095	JT5	4 Blocks
954-0379	JT922 Fine Thread	4 Blocks



Inserts

ROD WIPERS, VICE JAWS & INSERTS CONTINUED ON THE NEXT PAGE.

PARTS & ACCESSORIES
CONTINUED

OTHER JAW INSERTS

Part #	Fits Model
954-0809	AA440T
954-0646	AA440T
954-0984	Case 6030
954-0681	Astec DD110/DD110S
954-0573	Astec 3238 DD70/DD100

WIRE PULLING COLLARS

Part #	Description
954-0368	2 Leg Pulling Collar – 2,000 lb Capacity
954-0369	4 Leg Pulling Collar – 2,000 lb Capacity
954-0370	2 Leg Pulling Collar – 5,500 lb Capacity
954-0371	4 Leg Pulling Collar – 5,500 lb Capacity
954-0372	2 Leg Pulling Collar – 8,200 lb Capacity
954-0373	4 Leg Pulling Collar – 8,200 lb Capacity
954-0374	2 Leg Pulling Collar – 9,800 lb Capacity
954-0375	4 Leg Pulling Collar – 9,800 lb Capacity



954-0368

DUAL SPLIT ROD WIPERS

Part #	Drill Rod Diameter
954-0469	2.125" ID, 9" O.D.
954-0470	2.375" ID, 9" O.D.
954-0471	2.75" ID, 9" O.D.
954-0472	3" ID, 9" O.D.
954-0486	1.5" ID, 9" O.D.
954-0487	1.75" ID, 9" O.D.
954-0488	1.875" ID, 9" O.D.
954-0473	3.5" ID, 14" O.D.
954-0474	4" ID, 14" O.D.
954-0716	2.5" ID, 14" O.D.
954-0477	6" ID, 14" O.D.
954-0476	5" ID, 14" O.D.
954-0475	4.5" ID, 14" O.D.



4” Dual Split Rod Wiper

SINGLE ROD WIPERS

Part #	Drill Rod Diameter
954-0101	1.125"
954-0102	1.66"
954-0103	1.9"–2.06"
954-0104	2.375"
954-0105	2.875"
954-0106	3.5"



1.125” Single Rod Wiper

THREAD IDENTIFICATION KIT

The Radius thread ID kit makes it easy to know exactly what thread you have, or more importantly, which thread you need.

Ordering the wrong thread or sub can cost thousands in downtime and delays. This kit contains a number of thread gauges to easily identify all sizes of Vermeer® pipe and quick connect threads, Ditch Witch® pipe and EZ connection threads, API regular and IF Threads as well as other OEM threads common to HDD.

The Radius thread ID kits is also very useful in identifying various unknown subs in your yard that have plenty of useful life left.



Part #	Description
954-0159	Thread Identification Kit

LUBRICANTS & GREASE

Part #	Description	Size
954-0067	HD Drill Collar & Tool Joint	1 Gallon
954-0068	HD Drill Collar & Tool Joint	2 Gallon
954-0069	HD Drill Collar & Tool Joint	5 Gallon
954-0070	Drill Collar & Tool Joint Compound	14 oz
954-0419	***ECO-SAFE*** Drill Collar & Tool Joint Compound	1 Gallon
954-0378	***ECO-SAFE*** Drill Collar & Tool Joint Compound	2 Gallon
954-0448	***ECO-SAFE*** Drill Collar & Tool Joint Compound	5 Gallon
954-0795	Drill Collar & Tool Joint Compound	1 Gallon
954-0796	Drill Collar & Tool Joint Compound	2 Gallon
954-0797	Drill Collar & Tool Joint Compound	5 Gallon
954-1047	Stinger Enviro Lube	2 Gallon
954-1148	Arctic Thread Lube	1 Gallon
954-1054	Stinger Enviro Lube	1 Gallon



WORK GEAR & JOBSITE SUPPLIES CONTINUED ON THE NEXT PAGE.

GroundControl™
by Radius

UN SCREWUP ABLE.



GROUND CONTROL ADDITIVES

Introducing the Ground Control family of environmentally safe HDD drilling fluids from RadiusHDD. No guessing which one to use.

No measuring. **No worrying.**
You'd have to be trying to mess this up.



NEW

Easy to Use, Easy to Choose.

Ground Control is the easiest fluid additive you will ever use. Our color coded system makes it easy to pick the right additive for your specific job. Additives are measured per 500 gal tank.

Part #	Description	Info
954-1370	Ground Control Clay	Clay Inhibitor 32oz
954-1371	Ground Control Detergent	Concentrate Detergent 32z
954-1372	Ground Control Poly	PHPA Liquid Polymenr 64oz
954-1373	Ground Control Sand	Mixed Crystaline Comp. 64z
954-1374	Ground Control Xan	Liquid Xantham Gum 64oz
954-1452	Ground Control Clay XL	Clay Inhibitor Mix 32oz

PARTS & ACCESSORIES

CONTINUED

DRILLING MUD AND ADDITIVES

Part #	Product	Info
954-0440	Hydraul-EZ 50 LB Bag	Borehole Stabilizer & Lubricant
954-0549	30" Dope Brush	Applicator for Antiseize
954-0580	Super Gel X	HY Bentonite, 200 BBL, 50 lb Bag
954-0581	Cetco Drill-Terge	Wetting Agent, 5 Gallon Pail
954-0584	Cetco Superthin	Drilling Fluid Thinner, 5 Gallon
954-0585	Cetco Soda Ash	Sodium Carbonate, pH Balancer



JOB SITE SUPPLIES

Part #	Description
954-0162	Soil Probe / Rod
954-0509	Vise Wrench Set, Manual (3,000 lb-ft)
954-0712	Petol SLM Grip Tongs, 2-3/8"–4" OD, 28" Handle
954-0713	Petol SLM Grip Tongs, 3-3/4"–6-1/2" OD, 33" Handle
954-0976	Overshot Fishing Tool, 2-3/8" Reg Pin, 1" to 3.5"
954-0977	Overshot Fishing Tool, 2-7/8" Reg Pin, 2" to 4"
954-0958	Rigid Pipe Wrench, 60" OAL
954-0682	Break Away Jaw Eye Bolt
954-0683	Vice Wrench Dowel Pin
954-0684	Vice Wrench Flange Nut
954-1007	Break-Out Wrench Handle
954-1008	Break-Out Wrench Jaw
954-1010	RH Pivoting Nut (For Break-Out Wrench)
954-1011	LH Pivoting Nut (For Break-Out Wrench)
954-1012	Lynch Pin 0.438" x 2" (For Break-Out Wrench)
954-1013	Screw Drive Handle (For Break-Out Wrench)
954-0703	Petol Drill Pipe Tongs Only (3"–8.25", 36" Handle)
954-0704	Petol Drill Pipe Tong Chain (Complete, 7.25"–8.25" OD)
954-0706	Petol Drill Pipe Tong Chain (Complete, 9.875"–10.75" OD)
954-0707	Petol Drill Pipe Tongs Only (4"–14", 36" Handle)
954-0708	Petol Special Chain Complete (4-5 Link, 13.75"–14" OD)
954-0709	Petol Bukup Tongs Only (4.25"–10.75", 48" Handle)
954-0710	Petol Bukup Special Chain (Complete, 9.5"–10.75" OD)
954-1119	Petol Bukup Tong Handle (48", 2.125"–8" OD, 4.66" Grip Width)
954-1120	Petol Bukup Tong Chain (Complete, 7.625"–8" OD)

FOR DOWNHOLE TOOL RETRIEVAL.

OVERSHOT FISHING TOOL

954-0460





BATTERIES

Part #	Description
954-0402	CT-Silver Lithium Super Cell
954-0403	CT-Blue Lithium
954-0404	NI-CD Rechargeable
954-0728	F Series Battery Pack



WIRELINE

Part #	Product	Info
954-0314	Wireline Adapter	3500 / 4500 / 5000 / 6500 Series Radius Rock Housings
954-0438	Wireline Adapter Kit	Wireline Accessory
954-0459	Black Heat Shrink with Sealant	3/8" x 4 ft (2 to 1 Shrink)
954-0460	Downhole Wire	10/7 Strand 45 mil, 1,000 ft Reel
954-0461	Nicopress Wire Sleeves	FW-2-3 3/4
954-0462	Crimping Tool #51	Wireline Crimpers
954-0463	2.875 IF Spider	Wireline Accessory
954-0464	3.5 IF Spider	Wireline Accessory
954-0970	Down Hole Spider	10/7 Strand 45 mil, 500 ft Reel
954-0821	End Load Wireline Kit	Wireline Accessory
954-0799	Wireline Butt Connector 100 ct Bag	Wireline Accessory
954-0800	Wireline Crimping Tool for Butt Connectors	Wireline Accessory
954-0784	Clear Heat Shrink with Sealant	3/8" x 4 ft (2 to 1 Shrink)



954-0460

OVERSHOT FISHING TOOLS

Part #	Description	Info
954-1247	Overshot Fishing Tools	2-3/8" Reg Box, 3.125" to 1.5"
954-1244	Overshot Fishing Tools	2-7/8" Reg Box, 3.5" to 1.5"
954-1245	Overshot Fishing Tools	2-7/8" Reg Box, 4" to 2"
954-1246	Overshot Fishing Tools	3-1/2" Reg Box, 5" to 3"
954-0977	Overshot Fishing Tools	2-7/8" Reg Pin, 4" to 2"

OUR FULL LINE OF PARTS AND ACCESSORIES IS ALSO AVAILABLE ONLINE AT

WWW.RADIUSHDD.COM

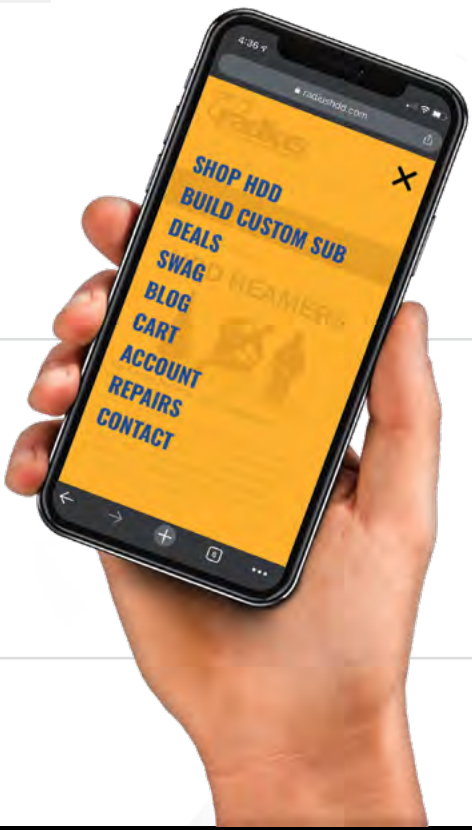

WORK GEAR & JOBSITE SUPPLIES CONTINUED ON THE NEXT PAGE.

PARTS & ACCESSORIES

CONTINUED

DRILL PIPE

Part #	Description	Info
PIP-0025	TT4X	1.660 x 5'
PIP-0011	CASE 6010	2.063 x 10'
PIP-0015	CASE 6030	2.375 x 10'
PIP-0026	AA DD110 / DD100x120	2.875" x 20'



VERMEER® DRILL PIPE

Part #	Description	Info
PIP-0001	D7x11	1.660 x 6'
PIP-0007	D1620	1.900 x 10'
PIP-0009	D20x22 / D24x26	2.063 x 10'
PIP-0014	D24x40	2.375 x 10'
PIP-0016	D50x100 / D60x90	2.875 x 15'
PIP-0016	D50x100 / D60x90	2.875 x 15'
PIP-0036	D33x44 / 36x50	2.375 x 15' (FS650)
PIP-0037	D36x50 / 40x55	2.625 x 10' (FS700)
PIP-0038	D36x50 / 40x55	2.625 x 15' (FS700)
PIP-0027	D100x120 / D100x140	3.5" x 20' (FS1000)
PIP-0019	D80x100	3.5" x 15" (FS800)



Vermeer Compatible Drill Pipe

DITCH WITCH® DRILL PIPE

Part #	Description	Info
PIP-0002	JT 920 / 921	1.41-6 x 6'6"
PIP-0003	JT922 / JT9 / JT10	1.30-5 Coarse x 6'
PIP-0005	JT 920L	1.41-6 x 10'
PIP-0006	JT 1220	1.47-4 x 10'
PIP-0008	JT1720	1.69-6 x 10'
PIP-0010	JT2020 / JT20	1.94-4 x 10'
PIP-0012	JT2720	1.94-4 x 10', 3.00" Upset
PIP-0013	JT2720M1 / JT3020M1	2.11-4 x 10', 2.75" Upset
PIP-0017	JT4020	2.40-4 x 15'
PIP-0018	JT4020M1	2.59-4 x 15'
PIP-0021	JT7020	3.27-4 x 15'
PIP-0039	JT2720M1 / 3020M1	2.11-4 X 10', 3.00" Upset
PIP-0041	JT60	2.46-4 x 15'
PIP-0042	JT5	1.10-5 Coarse x 4'9"
PIP-0043	JT520	1.21-6 x 4'9"
PIP-0044	JT40	2.10-4 x 15'
PIP-0045	JT24	1.76-4 x 10'



Ditch Witch Compatible Drill Pipe



Standard HDD Drill Pipe

NEED A REPAIR?

RADIUS OFFERS A FULL LINE OF REPAIR SERVICES TO MAXIMIZE YOUR TOOLING LIFE AND REDUCE THE RISK OF LOSING TOOLS DOWN HOLE.



PDC REPAIRS

Maintaining your PDC bit is critical to its performance. Radius offers inspections, maintenance and repair services for all sizes and types of PDC Bits. From simply rotating cutters to body repairs and full cutter replacement, Radius has the experience and capability to maximize your PDC tool investment.



ROCK BIT REPAIRS

Radius offers repair services on all brands of HDD pilot tools, from simple carbide replacement to full body rebuilds. There is no charge for the evaluation and inspection in order to assist you in determining the value of repairing your tooling.



HOLE OPENER & REAMER REPAIRS

Let Radius extend the life of your hole openers and reamers with a thorough evaluation and inspection, replacing failed cones or cutters, rebuilding worn areas, hardfacing application and thread repairs.

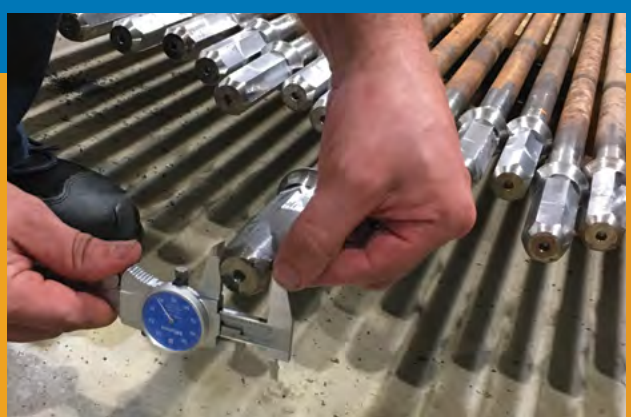

AT & DR INNER ROD REPAIRS

For contractors who run AT or DR rigs, Radius now offers an Inner Rod repair service that rebuilds and machines worn inner shafts back to original specifications at a much lower cost than a new replacement rod. Give us a call to learn more about our “Rod Swap” plan to minimize your downtime.

RADIUS HDD
2525 Ranger Hwy
Weatherford, TX 76088

RadiusHDD.com

THE BEST ROCK TOOLS IN THE BUSINESS

Call or Text **855-471-2771**

radius®
TOOLS FOR HDD PROFESSIONALS